FLOW AIDS

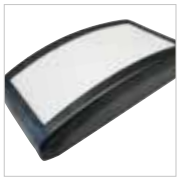

THE WORLDWIDE LEADER IN VIBRATION TECHNOLOGY

OLI®

Intro

Company profile 4
Why use flow aids? 6
Where use flow aids? 6
Product range 7

Internal applications

AERATORS 8
VBS - Bin aerators 9
VBS - External mounting kit 10
VBT - Tank truck aerators 11
I100 - Aeration pads 12
U - Aeration nozzles 13

AIR JET 14
PG - Air blasts 15
PJ - Combined hammer blasts 16

External applications

LINEAR PNEUMATIC VIBRATORS 18
PS - Single impact 19
P - Continuous impact 20
K - Cushioned 22
F - Adjustable cushioned 23

ROTARY PNEUMATIC VIBRATORS 24
S - Ball 25
OR - Roller 26
OT - Turbine 27

ELECTRIC VIBRATORS 28
MVE-MICRO - 2 poles 29
MVE - 2 poles 30
MVE-DC - Direct current 32

HYDRAULIC VIBRATORS 34
MVO 35

Worldwide leader in vibration technology

OLI is **the world's top selling manufacturer of Electric and Pneumatic Vibrators**.
A high level of customer service is guaranteed through 18 OLI Trading Subsidiaries, 36 local warehouses and 3 manufacturing plants worldwide.

OUR 3 DIVISIONS

PROVIDE CUSTOMERS WITH OPTIMAL SOLUTIONS FOR ALL REQUIREMENTS

INDUSTRIAL VIBRATORS	FLOW AIDS	CONCRETE CONSOLIDATION
Electric motovibrators for vibrating equipments.	Comprehensive range of electric and pneumatic vibrators to solve any problem of flowability.	Internal concrete vibrators and converters for reliable and efficient concrete compaction.

Originally specialising in immersion vibrators for concrete consolidation, OLI is now the worldwide leader in vibration technology, with a **complete range of electric and pneumatic internal and external vibrators**.

By supplying **competitive, high quality products for wide-ranging applications,** OLI combines **performance** and **reliability** by adapting to the ever-changing market. A strong believer in innovation, OLI is constantly striving to be ahead of the opposition.

As a global player in industrial vibration technology, the key focus of OLI's business strategy is **rapid stock delivery, any time, anywhere in the world**.

Excellent customer service is of pivotal importance: the company guarantees **quick order processing** and customers worldwide can enjoy access to the same high quality product and services.

OLI has access to credible expertise when it comes to finding suitable solutions to customers' requests. A team of engineers specialised in designing efficient, reliable and safe solutions backed by a **globally certified management**.

OLI provide their customers with state-of-the-art equipment and the blueprint for the next generation of products is already in progress.

SMART POWDER HANDLING

More than 50 years of **EXPERIENCE** in solving material handling problems make OLI the ideal partner for customers across all industries.

A **GROUP OF SPECIALISTS** is at the customers' disposal to study and offer solutions that perfectly suit any type of application and material present on the market.

OLI analyses problems in the most comprehensive way: the type of powder to be handled, environmental conditions and the type of process. The **CUSTOMER'S NEEDS** will always be at the centre of attention.

OLI's **GLOBAL SALES NETWORK** assists customers locally in over 50 countries ensuring ex-stock delivery from the subsidiaries' own warehouses.

OLI GUIDES YOU TO THE RIGHT CHOICE

Application problem → 1 POWDER ANALYSIS → 2 PROJECT STUDY → 3 DELIVERY (GLOBAL NETWORK) → Flow Aids Solution

ONLINE SIZING CALCULATOR

NOT TOO BIG, NOT TOO SMALL, JUST RIGHT

To complete the service to the customer, OLI has created an application that guides to the choice of the most suitable vibrator for the project, step-by-step.

OLIVIBRA CALCULATOR - MAIN FEATURES

- Available on-line
- Real-time updates
- Multilingual platform

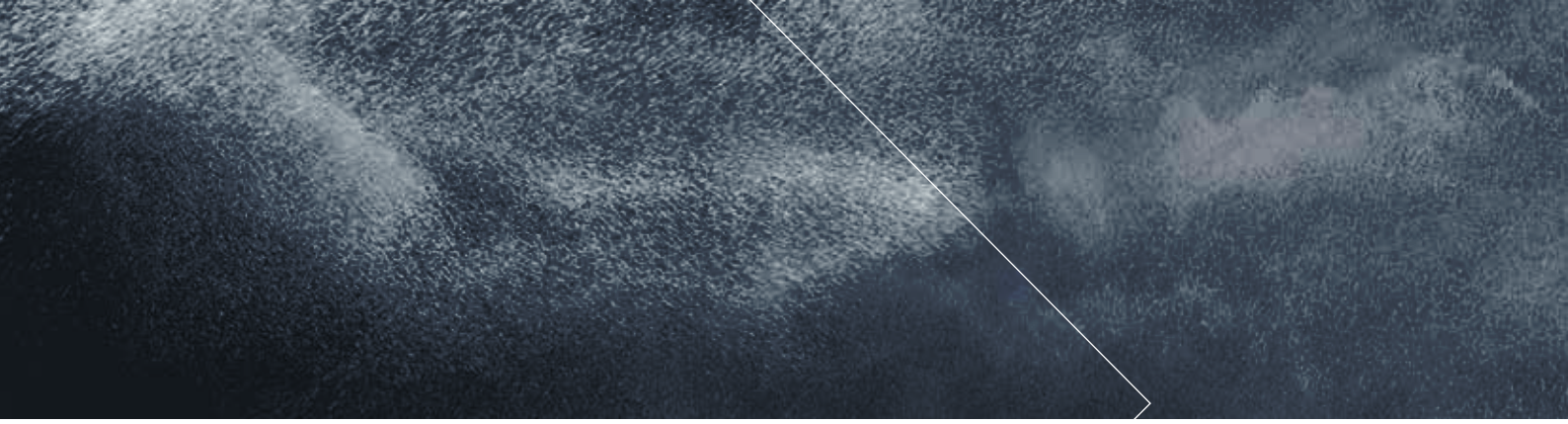

WHY USE FLOW AIDS?

SITUATION

Due to their characteristics, many **POWDERS** inside silos, hoppers, chutes, piping, tanks or any other container will tend to **STICK TO THE SURFACE**.

PROBLEM

Any small change in the opening of the outlet, a rough surface, bends, shallow angles, the shape of the container, as well as the particle shape of the material handled might slow down the flow of the product, thus generating **WASTE**.

SOLUTION

FLOW AIDS are designed to solve issues caused by design errors or by the characteristics of the powder or granules handled. Moreover, they **INCREASE PROCESS EFFICIENCY** and **IMPROVE PLANT SAFETY**.

WHERE USE FLOW AIDS?

Industries

Food
Animal feed
Fertilizers
Agriculture
Pharmaceuticals
Chemicals
Plastics
Cement
Glass
Air treatment
Automotive
Mining

Applications

Silos
Hoppers
Slides and chutes
Piping
Threshers
Dump trucks

Benefits

Safe
Economic
Robust
Reliable
Easy to install
High performance
Global availability
Increased productivity

PRODUCT RANGE

INTERNAL APPLICATION ➡ IN CONTACT WITH MATERIAL

AERATORS

- VIBRO-AERATOR **VB**
- AERATION PAD **I100**
- AERATION NOZZLE **U**

AIR JET

- AIR CANNON **PG**
- COMBINED HAMMER BLAST **PJ**

EXTERNAL APPLICATION ➡ NOT IN CONTACT WITH MATERIAL

PNEUMATIC VIBRATORS

LINEAR	ROTARY
SINGLE IMPACT **PS**	BALL **S**
CONTINUOUS IMPACT **P**	ROLLER **OR**
CUSHIONED **K, F**	TURBINE **OT**

ELECTRIC VIBRATORS

- 2 POLES 1PH OR 3PH **MVE**
- 2 POLES 1PH OR 3PH **MVE-MICRO**
- DIRECT CURRENT **MVE-DC**

HYDRAULIC VIBRATORS

- **MVO**

INTERNAL APPLICATION

AERATORS

PRODUCT SERIES	APPLICATIONS	POWDERS	FEATURES	BENEFITS
BIN AERATORS **VB** 	Silos Hoppers Pipes Dry bulk tank trailers Dry bulk rail tankers	**Dry, fine powders.** Cement Lime Pigments Plastics Starch Flour Sugar Coffee	Compatible with foods and chemicals.	Economical Easy to install Efficient Durable Available in two sizes (MICRO or standard) External mounting
AERATION PADS **I100** 	Silos Hoppers	**Dry, fine powders.** Suitable for cement, lime	Low air consumption (0.2 bar pressure). Create fluid bed.	Economical Easy to install External mounting kit
AERATION NOZZLES **U** 	Silos Hoppers	**Dry, fine powders.** Suitable for cement, lime	Low air consumption (0.2-1 bar pressure). Create fluid bed.	Economical Easy to install Compact design Suitable for retrofitting External mounting

APPLICATIONS

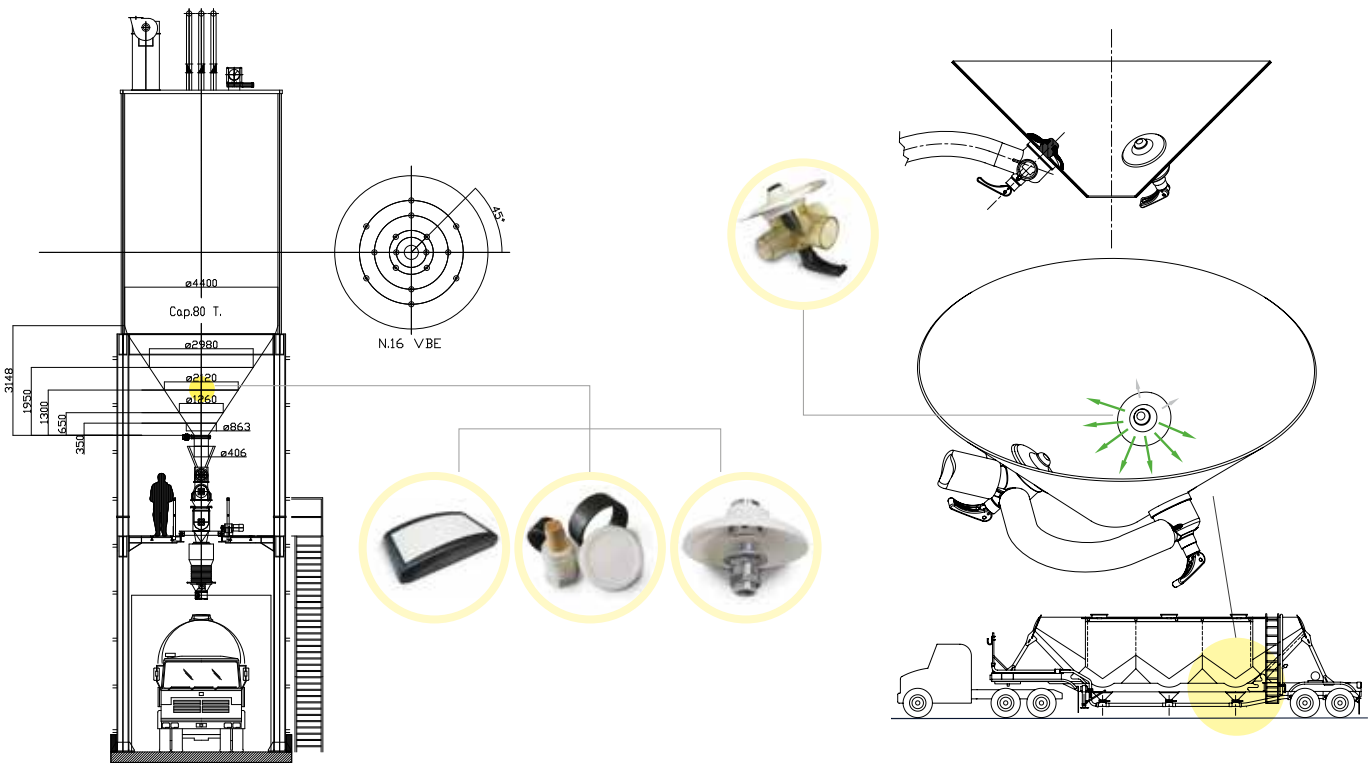

VBS - Bin aerators

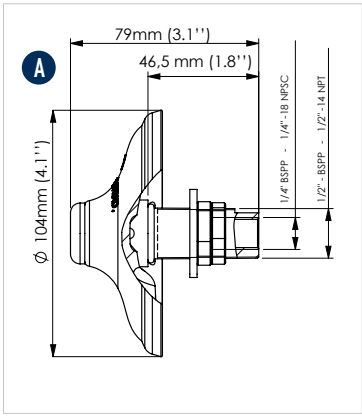

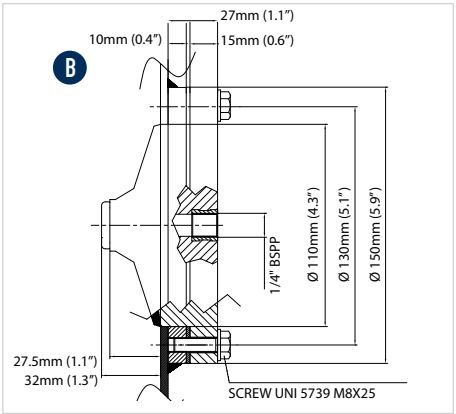

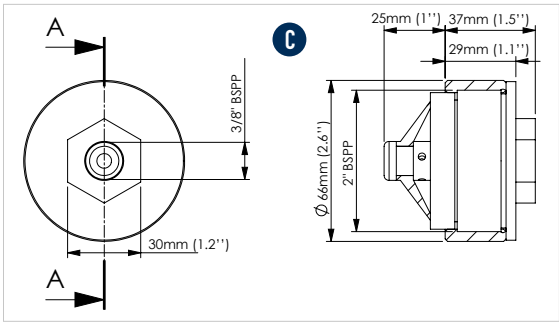

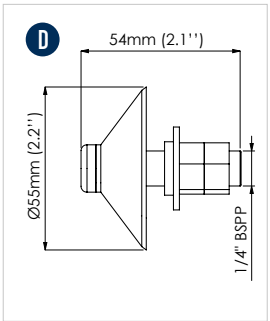

MODEL	DRAWING	MEMBRANE COLOUR	STEM MATERIAL	AIR CONSUMPTION								WORKING TEMPERATURE			
				0.8 bar (11.6 psi)		2 bar (29 psi)		4 bar (58 psi)		6 bar (87 psi)		°C		°F	
				l/min	Cfm	l/min	Cfm	l/min	Cfm	l/min	Cfm	Min.	Max.	Min.	Max.
VBS	A	White	Aluminium	600	20.0	800	28.0	950	33.0	1150	40.0	-40	170	-40	338
VBSI	A	White	Stainless steel	600	20.0	800	28.0	950	33.0	1150	40.0	-40	170	-40	338
VBSIHT	A	Red	Stainless steel	600	20.0	800	28.0	950	33.0	1150	40.0	-40	235	-40	455
VBSIMD	A	Blue	Stainless steel	600	20.0	800	28.0	950	33.0	1150	40.0	-40	170	-40	338
VBE	B	White	Nylon	-	-	100	3.5	150	5.3	250	8.8	-40	80	-40	176
VBSME	C	White	Nylon	130	4.6	150	5.3	-	-	-	-	-40	80	-40	176
VBSM	D	White	Aluminium	130	3.5	150	5.0	-	-	-	-	-40	170	-40	338
VBSMI	D	White	Stainless steel	130	3.5	150	5.0	-	-	-	-	-40	170	-40	338
VBSMIHT	D	Red	Stainless steel	130	3.5	150	5.0	-	-	-	-	-40	235	-40	455
VBSMIMD	D	Blue	Stainless steel	130	3.5	150	5.0	-	-	-	-	-40	170	-40	338

VBS - BIN AERATORS

APPLICATION	Silos, hoppers, pipes
POWDER	Dry, fine, granular
PROBLEM SOLVING	Bridge and rat-holing

FEATURES

DUTY CYCLE	Continuous or discontinuous
WORKING PRESSURE	From 0.8 bar to 6 bar (from 12 psi to 87 psi) - Suggested: 4 bar (58 psi) VBSMicro: from 0.8 bar to 2 bar (from 12 psi to 29 psi)
PNEUMATIC CIRCUIT	Filter + flow control valve
AIR SUPPLY QUALITY	Non-Lubricated (Class. 5.4.1)
TECHNOLOGY	Vibro-Aerator
MATERIAL	Silicone membrane (food grade) - FDA 177.2600 Aluminium / stainless steel stem (Food & Pharmaceutical grade) Nylon body with steel ring (VBSE)

OPTIONS

EXTERNAL MOUNTING KIT	Stainless steel rectangular plate and fitting bracket

This information is furnished without warranty, representation, inducement or license of any kind. It is accurate to the best OLI knowledge or is obtained from sources believed to be accurate. OLI therefore assumes no legal responsibility.

VBS - External mounting kit

*

*** THE VBS IS NOT INCLUDED IN THE EXTERNAL MOUNTING KIT**

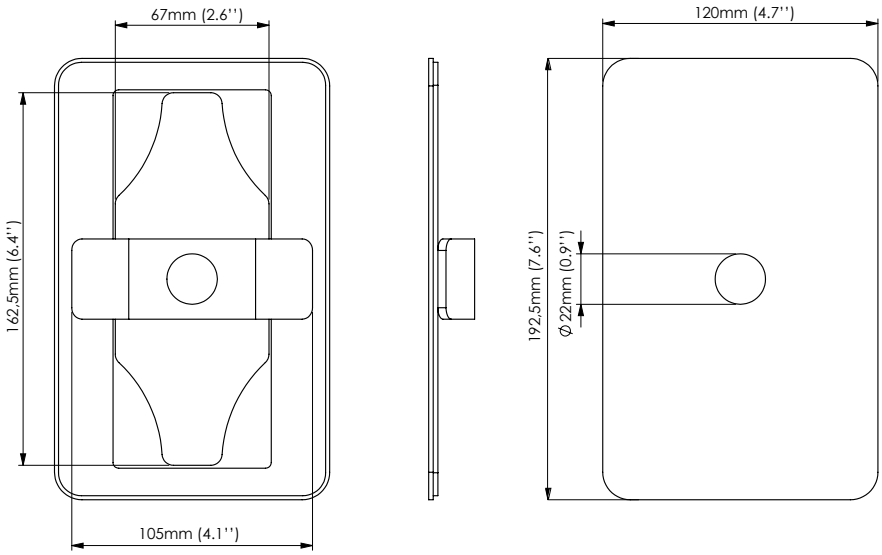

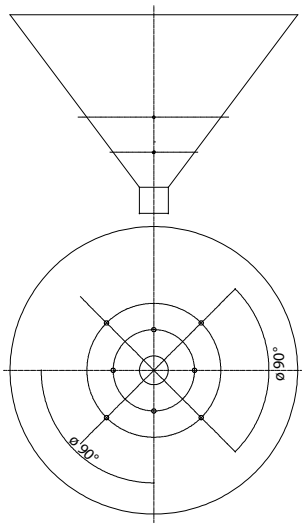

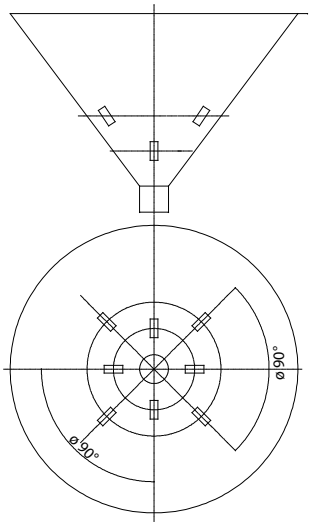

FLUIDIZER PNEUMATIC CIRCUITS

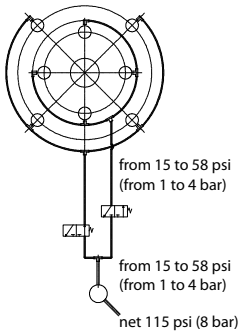

EXTERNAL MOUNTING KIT

PROBLEM SOLVING	Allows the installation on silos that are difficult to reach from the inside
MATERIAL	Stainless steel rectangular plate
SIZE	120 x 192.5 mm (4.72" x 7.58")
CUT OUT SIZE	67 x 162.5 mm (2.64" x 6.40")

This information is furnished without warranty, representation, inducement or license of any kind. It is accurate to the best OLI knowledge or is obtained from sources believed to be accurate. OLI therefore assumes no legal responsibility.

VBT – Tank truck aerators

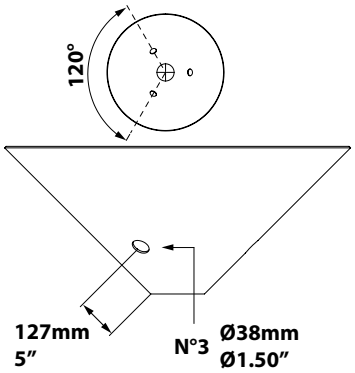

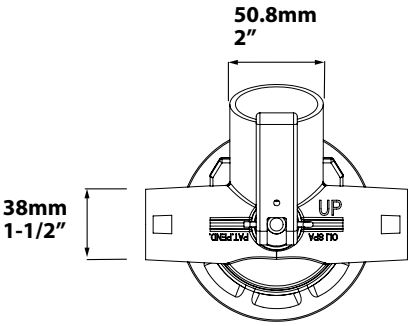

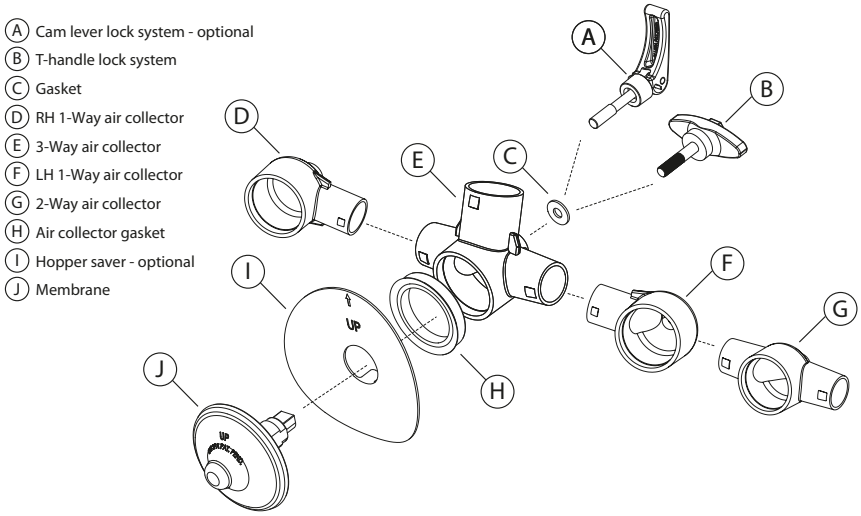

VBT SERIES

APPLICATION	Dry bulk tank trailer, rail tanker
POWDER	Dry, fine, granular
PROBLEM SOLVING	Bridging and rat-holing

FEATURES

DUTY CYCLE	Continuous (suitable to be used with blower)
WORKING PRESSURE	From 0.7 bar to 2 bar (from 10 psi to 29 psi)
PNEUMATIC CIRCUIT	Suitable standard pneumatic bulk trailer, works with all standard designs
WORKING TEMPERATURE	From -40 °C to 170 °C (from -40 °F to 340 °F)
TECHNOLOGY	Vibro-aeration
MATERIAL	Blue silicone membrane: metal detectable, comply with FDA 177.2600
	Stem - Black polyarylamide glass-fiber reinforced comply with 10/2011/EC - FDA - UL94
	Manifold - Black polyarylamide glass-fiber reinforced comply with 10/2011/EC - FDA - UL94
	Manifold - Transparent material comply with ISO 10993 - FDA 21 CFR 177.1655 - NSF 51 - UL94
	Lever and T-handle - Black polyarylamide glass-fiber reinforced / Stainless steel thread shaft
	Silicone gasket

OPTIONS

CAM LEVER	Shaft material: AISI304
HOPPER SAVER PLATE	Stainless steel

This information is furnished without warranty, representation, inducement or license of any kind. It is accurate to the best OLI knowledge or is obtained from sources believed to be accurate. OLI therefore assumes no legal responsibility.

I100 - Aeration pads

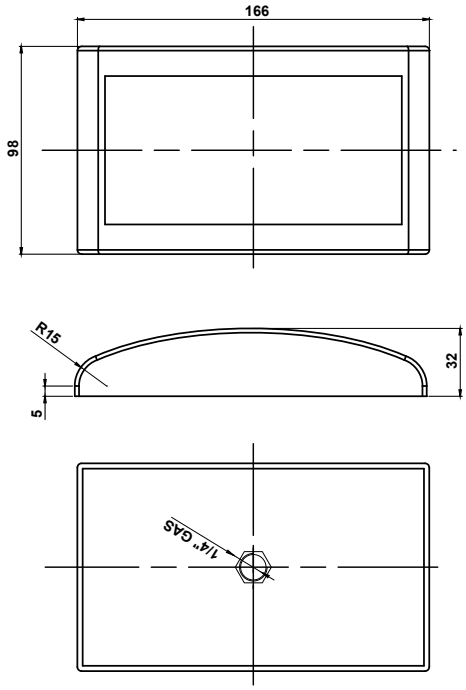

MODEL	AIR CONSUMPTION	
	0.2 bar (2.9 psi)	
	l/min	cfm
I100	2	0.07

I100 - AERATION PADS

APPLICATION	Hopper and silo
POWDER	Fine and dust (cement and lime)
PROBLEM SOLVING	Bridge and rat-holing

FEATURES

DUTY CYCLE	Continuous
WORKING PRESSURE	0.2 bar (2.9 psi)
PNEUMATIC CIRCUIT	Filter + flow control valve
AIR SUPPLY QUALITY	Class 5.4.1.
WORKING TEMPERATURE	From -20 °C to 80 °C (from -4 °F to 176 °F)
TECHNOLOGY	Fluidification
MATERIAL	Sintered PET filter, PS body

This information is furnished without warranty, representation, inducement or license of any kind. It is accurate to the best OLI knowledge or is obtained from sources believed to be accurate. OLI therefore assumes no legal responsibility.

U - Aeration nozzles

A

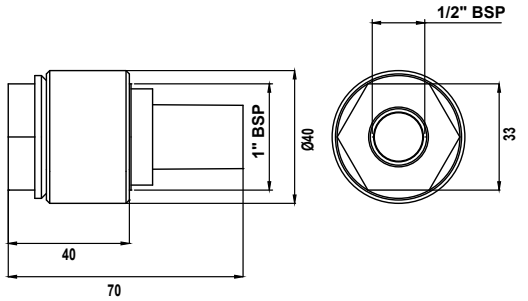

B

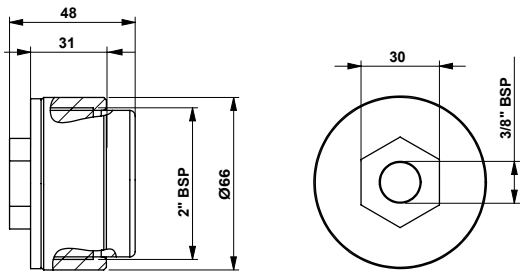

MODEL	DRAWINGS	AIR CONSUMPTION			
		0.2 bar (2.9 psi)		1 bar (14 psi)	
		l/min	Cfm	l/min	Cfm
U025	A	0.83	0.03	-	-
U060	B	-	-	30	1.1

U - AERATION NOZZLES

APPLICATION	Hopper and silo - piping
POWDER	Fine and dust (cement and lime)
PROBLEM SOLVING	Bridge and rat-holing

FEATURES

DUTY CYCLE	Continuous
WORKING PRESSURE	From 0.2 bar to 1 bar (from 2.9 psi to 14 psi)
PNEUMATIC CIRCUIT	Filter + flow control valve
AIR SUPPLY QUALITY	Class 5.4.1
WORKING TEMPERATURE	From -20 °C to 80 °C (from -4 °F to 176 °F)
TECHNOLOGY	Fluidification
MATERIAL	U060 - ring carbon steel, sintered PE filter, Nylon (UV resistant) body
	U025 - ring carbon steel, sintered brass filter, Nylon (UV resistant) body

This information is furnished without warranty, representation, inducement or license of any kind. It is accurate to the best OLI knowledge or is obtained from sources believed to be accurate. OLI therefore assumes no legal responsibility.

INTERNAL APPLICATION

AIR JET

PRODUCT SERIES	APPLICATIONS	POWDERS	FEATURES	BENEFITS
Air blasts - Gunjet **PG** 	Silos Hoppers	**Powders of large particle size and irregular shape; fibrous powders and flakes.** Wood fibres Textile fibres Paper Plastics Bran	Compact design with integrated solenoid valve. The air blade generated by the high pressure jet helps to clean the hopper surface.	Suitable for bridge breaking Economical Easy to install Low air consumption Mounting plate included
Combined Hammer Blasts - Picjet **PJ** 	Silos Hoppers	**Lime and ceramic powders.** Cement Ashes Vegetable meals Fertilizers Detergents Pigments Clay Oxides	Compact design with integrated solenoid valve. The combined effect of the air jet plus. Single impact ensures excellent results in eliminating bridging or ratholing.	Efficient Easy to install Combined effect Innovative Supplied with mounting plate

APPLICATIONS

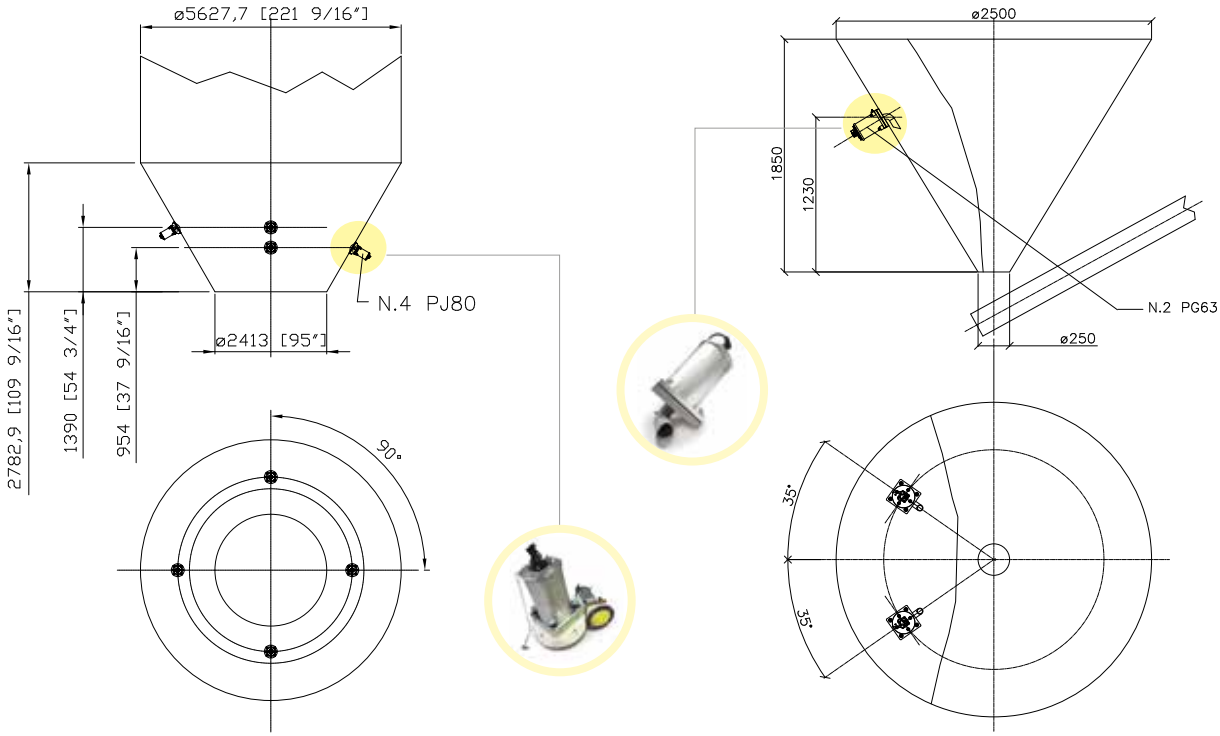

PG - Air blasts

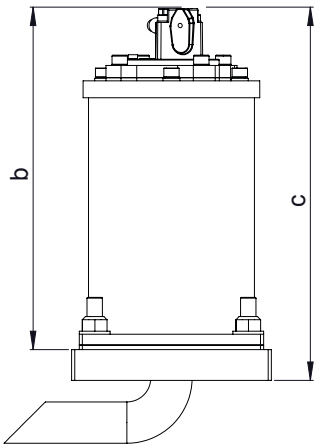

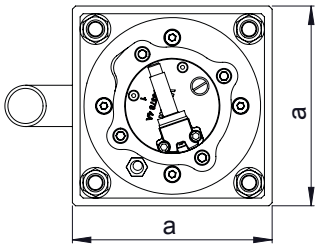

MODEL	AIR CONSUMPTION (Nl)		I Ø PIPE	AIR INLET	DIMENSIONAL SPECIFICATIONS A	B	C
	3 bar	6 bar	mm	BSPP	mm	mm	mm
PG 40	3.6	5.3	6	1/8" BSPP	130	220	243
PG 63	6.4	11.6	8	1/4" BSPP	160	260	283
PG 80	12.5	21.0	8	1/4" BSPP	200	308	336

PG - AIR BLASTS

APPLICATION	Hopper and silo
POWDER	Large size, irregular shape, fibrous dust and flakes
PROBLEM SOLVING	Bridge and rat-holing

FEATURES

DUTY CYCLE	Discontinuous
WORKING PRESSURE	From 3 bar to 6 bar (from 43 psi to 87 psi)
PNEUMATIC CIRCUIT	Filter + flow control valve
AIR SUPPLY QUALITY	Class 5.4.1.
WORKING TEMPERATURE	From -20 °C to 80 °C (from -4 °F to 176 °F)
MAX NOISE LEVEL	105 dB (a)
TECHNOLOGY	High pressure jet
MATERIAL	Steel body and plate, PS040-063 nylon (PS080 aluminium) head

OPTIONS

TIMER	Adjustable from 30sec to 45min
MULTI-TENSION COILS	From 24v (Ac/Dc) to 230v
FULLY PNEUMATIC KIT	Available

This information is furnished without warranty, representation, inducement or license of any kind. It is accurate to the best OLI knowledge or is obtained from sources believed to be accurate. OLI therefore assumes no legal responsibility.

PJ - Air Jet - Combined hammer blasts

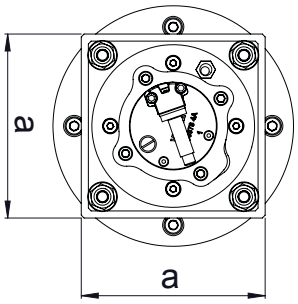

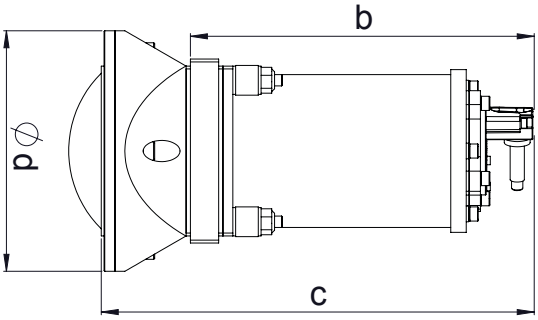

DIMENSIONAL SPECIFICATIONS				
MODEL	A	B	C	ØD
	mm	mm	mm	mm
PJ 40	130	220	306	170
PJ 63	160	260	363	222
PJ 80	200	308	435	280

MODEL	ENERGY (J)	FORCE (N)	ENERGY (J)	FORCE (N)	AIR CONSUMPTION (Nl)		I Ø PIPE	AIR INLET
	3 bar		6 bar		3 bar	6 bar	mm	BSPP
PJ 40	8.4	199	18.1	429	3.6	5.3	6	1/8" BSPP
PJ 63	28.8	589	62.0	1268	6.4	11.6	8	1/4" BSPP
PJ 80	59.2	846	153.0	2186	12.5	21.0	8	1/4" BSPP

PJ - AIR JET - COMBINED HAMMER BLASTS

APPLICATION	Hopper and silo
POWDER	Fine and dust
PROBLEM SOLVING	Bridge and rat-holing

FEATURES

DUTY CYCLE	Discontinuous
WORKING PRESSURE	From 3 bar to 6 bar (from 43 psi to 87 psi)
PNEUMATIC CIRCUIT	Filter + flow control valve
AIR SUPPLY QUALITY	Class 5.4.1.
WORKING TEMPERATURE	From -20 °C to 80 °C (from -4 °F to 176 °F)
MAX NOISE LEVEL	125 dB(a)
TECHNOLOGY	Single impact + high pressure blast
MATERIAL	Steel body, nylon base, steel attachment plate, PS040-063 nylon (PS080 aluminium) head

OPTIONS

TIMER	Adjustable from 30sec to 45min
MULTI-TENSION COILS	From 24V (ac/dc) to 230V
FULLY PNEUMATIC KIT	Available

This information is furnished without warranty, representation, inducement or license of any kind. It is accurate to the best OLI knowledge or is obtained from sources believed to be accurate. OLI therefore assumes no legal responsibility.

SMP
01

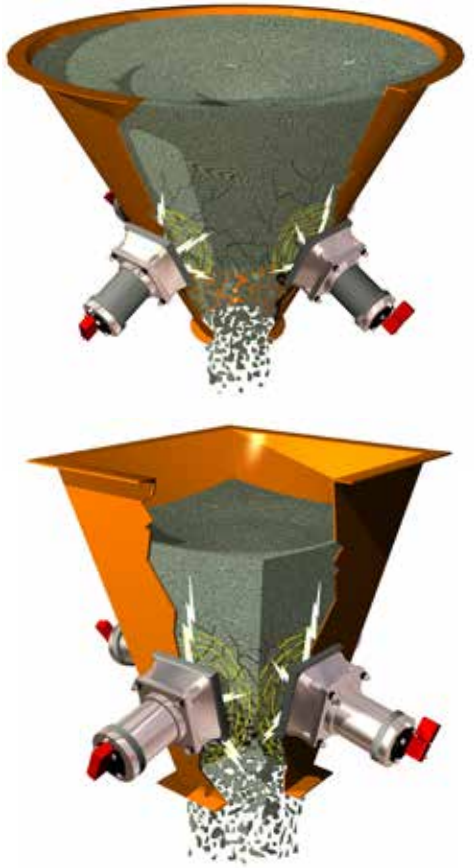

EXTERNAL APPLICATION

LINEAR PNEUMATIC VIBRATORS

PRODUCT SERIES	APPLICATIONS	POWDERS	FEATURES	BENEFITS
SINGLE IMPACT - MARTSHOCK **PS** 	Silos Storage systems Hoppers	**Hygroscopic powders.** Flour Detergents Phosphates Fertilizers Lime Cement Clay Pigments	High impact strength solves bridging or rat holing problems. Atex II3D c T85 °C (pneumatic only).	Economical Low air consumption Efficient Zero impact on silo structure Multi-voltage Integrated solenoid valve Timer
CONTINUOUS IMPACT **P** 	Silos Hoppers Piping Salt spreaders Dump trucks Rail cars	**Hygroscopic, humid powders.** Sludge Aggregates Sand Salt Foundry sand Animal feed	Sturdy, compact heavy-duty design, high temperature applications. Atex II2G c Tx Atex II2D c Tx.	Economical Low air consumption Efficient Suitable for high temperature and outdoor applications
CUSHIONED **K** 	Silos Hoppers Piping Tanks Compacting Vibrating feeders, tables and channels	**Hygroscopic or dusty powders, granules.** Animal feed Aggregates Plastics Foods	Suitable for food or chemical applications Suitable for dusty environments. Atex II2G c Tx Atex II2D c Tx	Economical Silent Low air consumption Easy to install
ADJUSTABLE CUSHIONED **F** 	Hoppers Chutes Vibrating feeders, Tables and channels	**Hygroscopic or dusty powders; granules.**	Alternative option to K. Compact design. Available in different shapes and casing materials. Threaded shaft for amplitude and force adjustment. Atex II2G c Tx Atex II2D c Tx	Economical Silent Low air consumption Easy to install Adjustable force and vibration frequency

APPLICATIONS

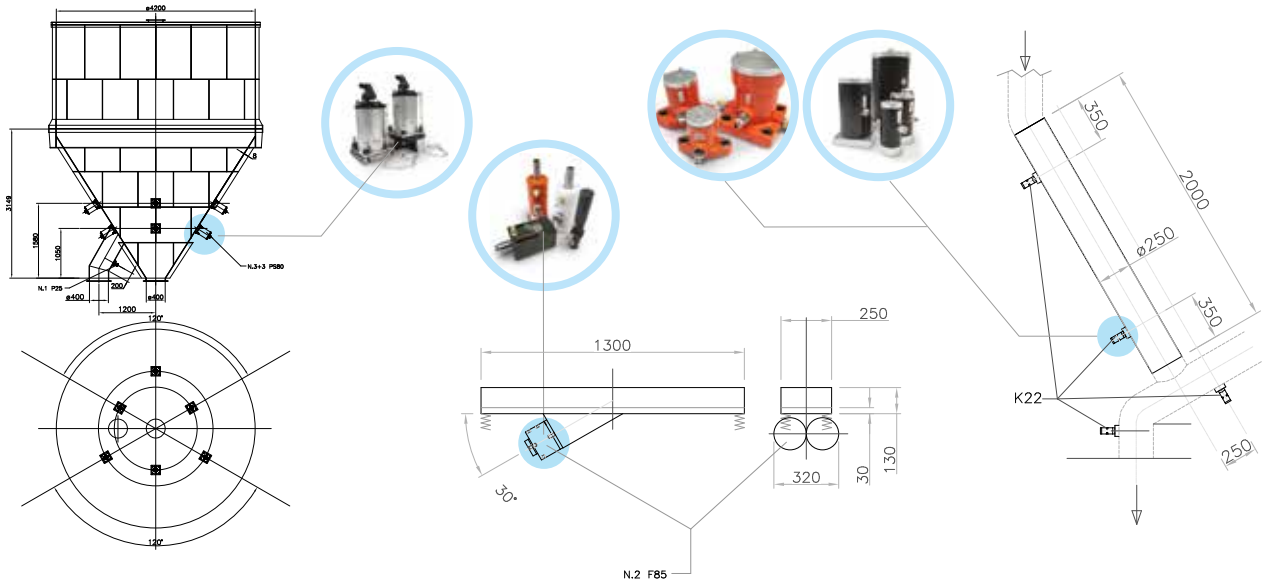

PS - Linear pneumatic vibrators - Single impact

A

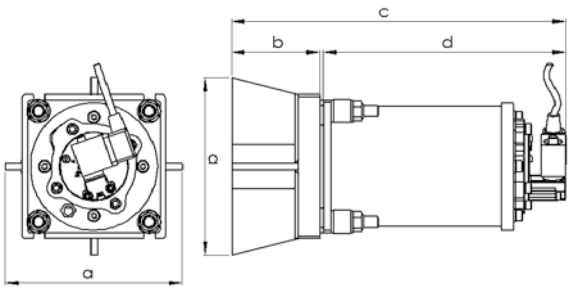

B

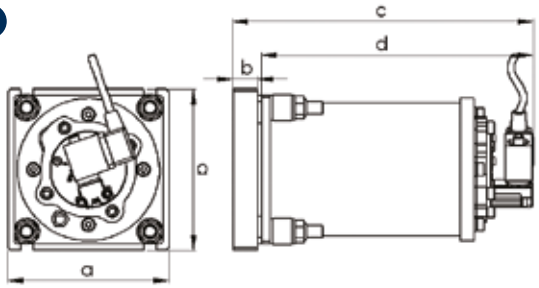

DIMENSIONAL SPECIFICATIONS - PS TYPE "A" [≤ 3mm HOPPER THICKNESS]				
MODEL	A	B	C	D
	mm	mm	mm	mm
PS 40	160	80	302	219
PS 63	200	95	357	259
PS 80	250	119	430	308

DIMENSIONAL SPECIFICATIONS - PS TYPE "B" [> 3mm HOPPER THICKNESS]				
MODEL	A	B	C	D
	mm	mm	mm	mm
PS 40	130	20	242	219
PS 63	163	20	282	259
PS 80	200	25	336	308

MODEL	ENERGY (J)	FORCE (N)	ENERGY (J)	FORCE (N)	AIR CONSUMPTION (Nl)		I Ø PIPE	AIR INLET
	3 bar		6 bar		3 bar	6 bar	mm	BSPP
PS 40	8.4	199	18.1	429	3.6	5.3	6	1/8" BSPP
PS 63	28.8	589	62.0	1268	6.4	11.6	8	1/4" BSPP
PS 80	59.2	846	153.0	2186	12.5	21.0	8	1/4" BSPP

PS - LINEAR PNEUMATIC VIBRATORS - SINGLE IMPACT

APPLICATION	Hopper and silo
POWDER	Hygroscopic
PROBLEM SOLVING	Bridge and rat-holing

FEATURES

DUTY CYCLE	Discontinuous
WORKING PRESSURE	From 3 bar to 6 bar (from 43 psi to 87 psi)
PNEUMATIC CIRCUIT	Filter + flow control valve
AIR SUPPLY QUALITY	Class 5.4.1.
WORKING TEMPERATURE	From -20 °C to 80 °C (from -4 °F to 176 °F)
MAX NOISE LEVEL	125 dB(a)
TECHNOLOGY	Single impact
MATERIAL	Steel body, steel attachment plate, PS040-063 nylon (PS080 aluminium) head

OPTIONS

KIT ATEX	II 3D c T85 °C - PP plate, technothane tablet
TIMER	Adjustable from 30sec to 45min
MULTI-TENSION COILS	From 24V (ac/dc) to 230V
FULLY PNEUMATIC KIT	Available

This information is furnished without warranty, representation, inducement or license of any kind. It is accurate to the best OLI knowledge or is obtained from sources believed to be accurate. OLI therefore assumes no legal responsibility.

P - Linear pneumatic vibrators - Continuous impact

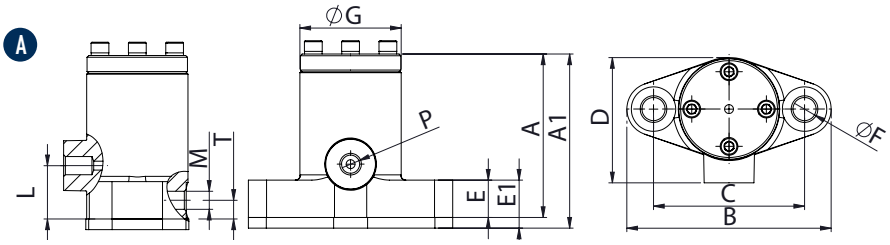

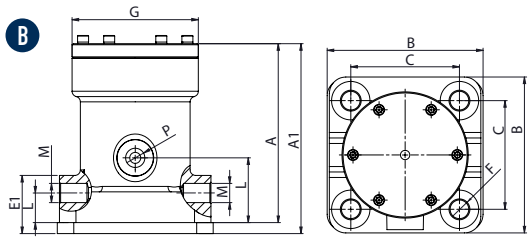

DIMENSIONAL SPECIFICATIONS																													
MODEL	DRAW.	A		A1		B		C		D		E		E1		F		G		H		P	L		M	N		WEIGHT	
		mm	in	mm	in	mm	in	mm	in	mm	in	mm	in	mm	in	mm	in	mm	in	mm	in	IN BSPP	mm	in	OUT BSPP	mm	in	kg	lb
P25	A	92	3.6	98	3.9	115	4.5	85	3.3	70	2.8	21	0.8	27	1.1	13	0.5	58	2.3	30	1.2	1/4"	10	0.4	1/4"	25	1.0	2.2	4.9
P40	A	121	4.8	127	5.0	148	5.8	110	4.3	91	3.6	25	1.0	31	1.2	17	0.7	75	3.0	45	1.8	3/8"	16	0.6	3/8"	35	1.4	4.5	9.9
P60	B	163	6.4	173	6.4	138x142	5.4x5.5	99x99	3.9x3.9	125	4.9	28	1.1	38	1.5	17	0.7	115	4.5	60	2.4	1/2"	27	1.1	2x1/2"	60	2.4	11	24.3

MODEL	2 bar (29 psi)							4 bar (58 psi)							6 bar (87 psi)						
	VIBRA-TION	FORCE		WORKING MOMENT		AIR CONSUMP.		VIBRA-TION	FORCE		WORKING MOMENT		AIR CONSUMP.		VIBRA-TION	FORCE		WORKING MOMENT		AIR CONSUMP.	
	V/min	N	lb	kgcm	inlb	l/min	Cfm	V/min	N	lb	kgcm	inlb	l/min	Cfm	V/min	N	lb	kgcm	inlb	l/min	Cfm
P25	2500	294	66	0.43	0.37	55	1.9	3800	680	153	0.43	0.37	80	2.8	4500	954	214	0.43	0.37	125	4.4
P40	1650	484	109	1.63	1.41	70	2.5	2200	860	193	1.63	1.41	120	4.2	2800	1396	314	1.63	1.41	150	5.3
P60	1200	1296	291	4.11	3.57	100	3.5	1600	2304	518	4.11	3.57	250	8.8	1900	3250	731	4.11	3.57	300	10.6

P - LINEAR PNEUMATIC VIBRATORS - CONTINUOUS IMPACT

APPLICATION	Hopper silo - salt spreader - dump trailer - rail cart
POWDER	Hygroscopic - humid - sticky
PROBLEM SOLVING	Bridge and rat-holing

FEATURES

DUTY CYCLE	Continuous
WORKING PRESSURE	From 2 bar to 6 bar (from 29 psi to 87 psi)
PNEUMATIC CIRCUIT	Filter + flow control valve + lubrification + 3/2 ways valve
AIR SUPPLY QUALITY	Class 5.4.4.
WORKING TEMPERATURE	ATEX From -20 °C to 110 °C (from -4 °F to 230 °F)
MAX NOISE LEVEL	100 dB(a)
TECHNOLOGY	Piston pneumatic impact
MATERIAL	Grey cast iron body (powder painted) - aluminium cover

OPTIONS

KIT ATEX	II 2D C TX II 2G C TX
SAFETY CHAIN	Available

This information is furnished without warranty, representation, inducement or license of any kind. It is accurate to the best OLI knowledge or is obtained from sources believed to be accurate. OLI therefore assumes no legal responsibility.

P-US - Linear pneumatic vibrators - Continuous impact

COMPATIBLE WITH MOST COMMON US FOOT PRINT

P1 R

P2 R

P3 R

P3 S

A

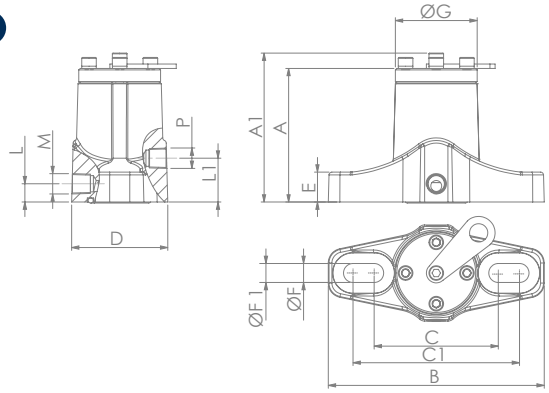

B

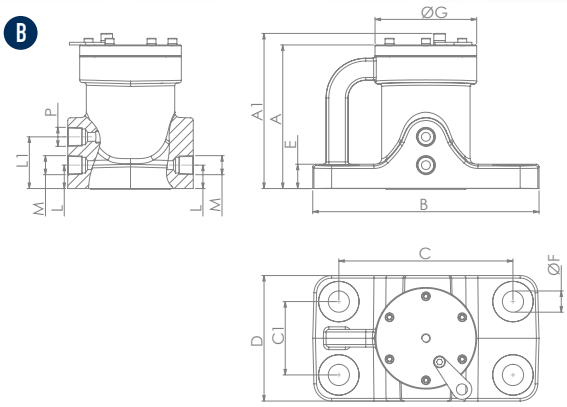

DIMENSIONAL SPECIFICATIONS																													
MODEL	DRAW.	A		A1		B		C		C 1		D		E		Ø F		Ø F 1		Ø G		P	L		L 1		M	WEIGHT	
		mm	in	mm	in	mm	in	mm	in	mm	in	mm	in	mm	in	mm	in	mm	in	mm	in	IN NPT	mm	in	mm	in	OUT NPT	kg	lb
P10 R	A	92	3.6	102	4.0	148	5.8	85	3.3	114	4.5	66	2.6	21	0.8	13	0.5	/	/	56	2.2	1/4"	30.	1.2	13	0.5	1/4"	2.2	4.9
P20 R	A	121	4.7	134	5.2	234	9.1	110	4.3	191	7.5	96	3.7	25	1.0	19	0.7	17	0.7	75	2.9	3/8"	45	1.7	19	0.7	3/8"	5.5	12.1
P30 R	A	163	6.3	176	6.8	235	9.2	153	6.0	190	7.4	130	5.1	28	1.1	16	0.6	/	/	115	4.5	1/2"	59	2.3	27	1.0	1/2"	11.0	24.3
P30 S	B	163	6.3	176	6.8	256	10.0	197	7.7	83	3.2	142	5.5	28	1.1	24	0.9	/	/	115	4.5	1/2"	59	2.3	27	1.0	1/2"	14.0	30.9

MODEL	2 bar (29 psi)							4 bar (58 psi)							6 bar (87 psi)						
	VIBRA-TION	FORCE		WORKING MOMENT		AIR CONSUMP.		VIBRA-TION	FORCE		WORKING MOMENT		AIR CONSUMP.		VIBRA-TION	FORCE		WORKING MOMENT		AIR CONSUMP.	
	V/min	N	lb	kgcm	inlb	l/min	Cfm	V/min	N	lb	kgcm	inlb	l/min	Cfm	V/min	N	lb	kgcm	inlb	l/min	Cfm
P10 R	2500	294	66	0.43	0.37	55	1.9	3800	680	153	0.43	0.37	80	2.8	4500	954	214	0.43	0.37	200	7.1
P20 R	1650	484	109	1.63	1.41	70	1.1	2200	860	193	1.63	1.41	120	4.2	2800	1396	314	1.63	1.41	250	8.8
P30 R	1200	1296	291	4.11	3.57	100	3.5	1600	2304	518	4.11	3.57	250	8.8	1900	3250	731	4.11	3.57	400	14.1
P30 S	1200	1296	291	4.11	3.57	100	3.5	1600	2304	518	4.11	3.57	250	8.8	1900	3250	731	4.11	3.57	400	14.1

P-US - LINEAR PNEUMATIC VIBRATORS - CONTINUOUS IMPACT

APPLICATION	Hopper silo - salt spreader - dump trailer - rail cart
POWDER	Hygroscopic - humid - sticky
PROBLEM SOLVING	Bridge and rat-holing

FEATURES

DUTY CYCLE	Continuous
WORKING PRESSURE	From 2 bar to 6 bar (from 29 psi to 87 psi)
PNEUMATIC CIRCUIT	Filter + flow control valve + lubrification + 3/2 ways valve
AIR SUPPLY QUALITY	Class 5.4.4.
WORKING TEMPERATURE	From -20 °C to 200 °C (from -4 °F to 392 °F)
MAX NOISE LEVEL	100 dB(a)
TECHNOLOGY	Piston pneumatic impact
MATERIAL	Grey cast iron body (powder painted) - aluminium cover

OPTIONS

SAFETY CHAIN	Available

This information is furnished without warranty, representation, inducement or license of any kind. It is accurate to the best OLI knowledge or is obtained from sources believed to be accurate. OLI therefore assumes no legal responsibility.

K - Linear pneumatic vibrators - Cushioned

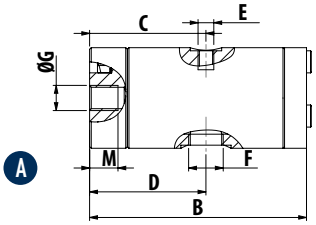

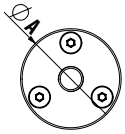

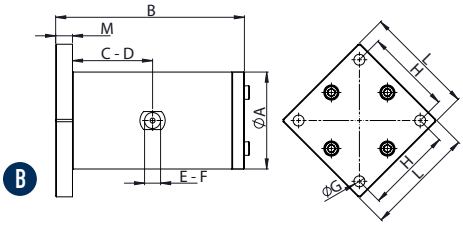

DIMENSIONAL SPECIFICATIONS																				
MODEL	DRAW.	A		B		C		D		E	F	G	H		L		M		WEIGHT	
		mm	in	mm	in	mm	in	mm	in	IN	OUT		mm	in	mm	in	mm	in	kg	lb
K 15 - K 15 LF	A	32	1.3	69	2.7	37	1.5	37	1.5	M5	1/8" BSPP	M8	/	/	/	/	9	0.4	0.2	0.4
K 22 - K 22 LF	A	45	1.8	105	4.1	56	2.2	56	2.2	1/8"BSPP	1/8" BSPP	M10	/	/	/	/	13	0.5	0.5	1.1
K 30 - K 30 LF	A	60	2.4	116	4.6	62	2.4	62	2.4	1/4" BSPP	1/4" BSPP	M12	/	/	/	/	13	0.5	1.0	2.3
K 45 - K 45 LF	B	80	3.2	151	5.9	78	3.1	78	3.1	1/4" BSPP	3/8" BSPP	ø 8.5	72	2.8	90	3.5	15	0.6	2.9	6.3
K 60 - K 60 LF	B	115	4.5	224	8.8	115	4.5	115	4.5	1/2" BSPP	1/2" BSPP	ø 13	102	4.0	130	5.1	20	0.8	4.6	10.1

LF = Lubrication Free

MODEL	2 bar (29 psi)							4 bar (58 psi)							6 bar (87 psi)						
	VIBRA-TION	FORCE		WORKING MOMENT		AIR CONSUMP.		VIBRA-TION	FORCE		WORKING MOMENT		AIR CONSUMP.		VIBRA-TION	FORCE		WORKING MOMENT		AIR CONSUMP.	
	VPM	N	lb	kgcm	inlb	l/min	cfm	VPM	N	lb	kgcm	inlb	l/min	cfm	VPM	N	lb	kgcm	inlb	l/min	cfm
K 15	5040	33.4	7.5	0.02	0.02	9	0.3	5880	45.4	10.2	0.02	0.02	15	0.5	6720	59.4	13.3	0.02	0.02	21	0.7
K 22	2880	95.4	21.4	0.21	0.18	32	1.1	3480	139.3	31.3	0.21	0.18	50	1.8	4080	191.5	43.0	0.21	0.18	73	2.6
K 30	2640	171.8	38.6	0.45	0.39	45	1.6	3120	239.9	53.9	0.45	0.39	90	3.2	3720	341.1	76.7	0.45	0.39	140	4.9
K 45	1920	390.9	87.8	1.94	1.68	56	2.0	2400	610.8	137.3	1.94	1.68	125	4.4	2580	705.9	158.6	1.94	1.68	194	6.8
K 60	1260	722.6	162.4	8.31	7.21	70	2.7	1560	1107.7	248.9	8.31	7.21	125	4.4	2160	2123.7	477.3	8.31	7.21	202	7.1
K 15 LF	5040	33.4	7.5	0.02	0.02	9	0.3	5880	45.4	10.2	0.02	0.02	15	0.5	6720	59.4	13.3	0.02	0.02	21	0.7
K 22 LF	2880	81.8	18.4	0.18	0.16	32	1.1	3480	119.4	26.8	0.18	0.16	50	1.8	4080	164.1	36.9	0.18	0.16	73	2.6
K 30 LF	2640	160.3	36.0	0.42	0.36	45	1.6	3120	223.9	50.3	0.42	0.36	90	3.2	3720	318.4	71.5	0.42	0.36	140	4.9
K 45 LF	1920	394.2	88.6	1.95	1.69	56	2.0	2400	615.9	138.4	1.95	1.69	125	4.4	2580	711.7	159.9	1.95	1.69	194	6.8
K 60 LF	1260	722.6	162.4	8.31	7.21	70	2.7	1560	1107.7	248.9	8.31	7.21	125	4.4	2160	2123.7	477.3	8.31	7.21	202	7.1

LF = Lubrication Free

K - CUSHIONED LINEAR PNEUMATIC VIBRATORS

APPLICATION	Hopper silo - compaction - vibrating feeder - table and channel
POWDER	Hygroscopic - dusty and granular
PROBLEM SOLVING	Detaching and compacting

FEATURES

DUTY CYCLE	Continuous
WORKING PRESSURE	From 2 bar to 6 bar (from 29 psi to 87 psi)
PNEUMATIC CIRCUIT	K: Filter + flow control valve + lubrication + 3/2 ways valve K-LF: Filter + flow control valve + 3/2 ways valve
AIR SUPPLY QUALITY	K: Class 5.4.4 K-LF: Class 5.4.1
WORKING TEMPERATURE	From -20 °C to 130 °C (from -4 °F to 266 °F)
MAX NOISE LEVEL	80 dB(a)
TECHNOLOGY	Piston pneumatic cushioned
ATEX	II 2D C TX II 2G C TX
MATERIAL	Aluminium body

This information is furnished without warranty, representation, inducement or license of any kind. It is accurate to the best OLI knowledge or is obtained from sources believed to be accurate. OLI therefore assumes no legal responsibility.

F - Linear pneumatic vibrators - Adjustable cushioned

A

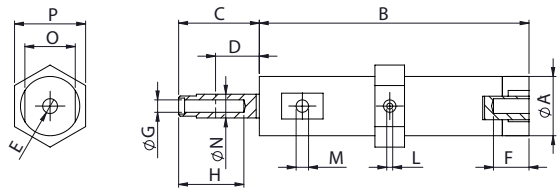

B

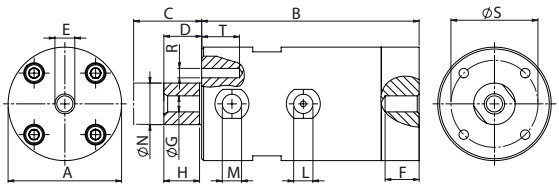

C

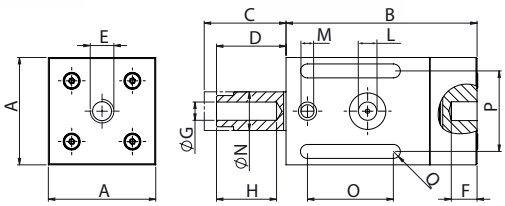

DIMENSIONAL SPECIFICATIONS

MODEL	DRAW.	A		B		C		D		E	F		G	H		I		L	M	N		O		P		Q		R	S		T		WEIGHT	
		mm	in	mm	in	mm	in	mm	in		mm	in		mm	in	mm	in	IN	OUT	mm	in	mm	in	mm	in	mm	in		mm	in	mm	in	kg	lb
F8	A	20	0.8	91	3.6	30	1.2	5	0.2	M6	10	0.4	M5	20	0.8	7	0.3	M5	M5	8	0.3	17	0.7	24	0.9	/	/	/	/	/	/	/	0.1	0.2
F15	B	50	2.0	115	4.5	41	1.6	7	0.3	M10	15	0.6	M10	15	0.6	13	0.5	1/8" BSPP	1/8" BSPP	15	0.6	12	0.5	/	/	36	1.4	M6	18	0.7	36	1.4	1.5	3.3
F15P	B	50	2.0	115	4.5	39	1.5	9	0.4	M10	15	0.6	M10	22	0.9	13	0.5	1/8" BSPP	1/8" BSPP	16	0.6	/	/	/	/	/	/	M6	12	0.5	36	1.4	0.5	1.1
F18	C	50	2.0	89	3.5	32	1.3	10	0.4	M10	10	0.4	M10	26	1.0	12	0.5	1/8" BSPP	1/8" BSPP	18	0.7	40	1.6	38	1.5	7	0.3	/	/	/	/	/	0.6	1.3
F25	B	60	2.4	115	4.5	45	1.8	10	0.4	M10	15	0.6	M10	15	0.6	19	0.8	1/4" BSPP	1/4" BSPP	22	0.9	15	0.6	/	/	46	1.8	M6	18	0.7	46	1.8	2.3	5.1
F40	B	85	3.4	140	5.5	57	2.2	13	0.5	M16	17	0.7	M16	20	0.8	36	1.4	1/4" BSPP	3/8" BSPP	40	1.6	20	0.8	/	/	65	2.6	M6	16	0.6	65	2.6	5.7	12.5
F85	B	160	6.3	122	4.8	52	2.1	22	0.9	M20	30	1.2	M20	30	1.2	/	/	3/8" BSPP	2x3/8" BSPP	85	3.3	/	/	/	/	/	/	M6	17	0.7	140	5.5	16.5	36.3

MODEL	2 bar							4 bar							6 bar						
	VIBRA-TION	FORCE		WORKING MOMENT		AIR CONSUMPTION		VIBRA-TION	FORCE		WORKING MOMENT		AIR CONSUMPTION		VIBRA-TION	FORCE		WORKING MOMENT		AIR CONSUMPTION	
	V/min	N	lb	kgcm	inlb	l/min	cfm	V/min	N	lb	kgcm	inlb	l/min	cfm	V/min	N	lb	kgcm	inlb	l/min	cfm
F8	2020	2.2	0.5	0.04	0.04	7	0.2	2950	5.1	1.1	0.04	0.04	19	0.7	3600	7.7	1.7	0.04	0.04	28	1.0
F15	2280	10.8	2.4	0.16	0.15	20	0.7	2520	17.6	4.0	0.22	0.19	38	1.3	2820	22.0	5.0	0.22	0.19	67	2.4
F15P	1920	9.7	2.2	0.21	0.18	20	0.7	2160	16.3	3.7	0.29	0.25	42	1.5	2340	19.4	4.4	0.29	0.25	80	2.8
F18	2070	17.9	4.0	0.34	0.29	29	1.0	2520	26.5	5.9	0.36	0.31	55	1.9	3300	47.8	10.8	0.36	0.31	100	3.5
F25	1860	19.8	4.5	0.46	0.40	32	1.1	2040	28.4	6.4	0.56	0.48	60	2.1	2220	34.0	7.6	0.56	0.48	105	3.7
F40	1380	46.1	10.4	1.96	1.70	80	2.8	1560	74.5	16.7	2.49	2.15	190	6.7	1740	92.8	20.9	2.49	2.15	320	11.2
F85	1680	220.9	49.7	6.36	5.50	240	8.4	1980	358.1	80.5	7.42	6.42	390	13.7	2280	475.0	106.7	7.42	6.42	580	20.4

F - LINEAR PNEUMATIC VIBRATORS - ADJUSTABLE CUSHIONED

APPLICATION	Vibrating feeder - table and channel
POWDER	Hygroscopic - dusty and granular
PROBLEM SOLVING	Detaching and compacting

FEATURES

DUTY CYCLE	Continuous
WORKING PRESSURE	From 2 bar to 6 bar (from 29 psi to 87 psi)
PNEUMATIC CIRCUIT	Filter + flow control valve + lubrification + 3/2 ways valve
AIR SUPPLY QUALITY	Class 5.4.4. | F15P - F18Q class 5.4.1
WORKING TEMPERATURE	From -20 °C to 200 °C (from -4 °F to 392 °F) | F15P - from -20 °C to 100 °C (from -4 °F to 212 °F)
MAX NOISE LEVEL	80 dB(a)
TECHNOLOGY	Piston pneumatic cushioned
ATEX	II 2D C TX II 2G C TX
MATERIAL	Grey cast iron body(powered painted) F15P: nylon body and aluminium cover F18: aluminium body (square shape)

This information is furnished without warranty, representation, inducement or license of any kind. It is accurate to the best OLI knowledge or is obtained from sources believed to be accurate. OLI therefore assumes no legal responsibility.

ROTARY PNEUMATIC VIBRATORS

PRODUCT SERIES	APPLICATIONS	POWDERS	FEATURES	BENEFITS
BALL VIBRATORS **S** 	Silos Hoppers Piping Chutes Compacting	**Dry powders.** Granules Plastics Sand Ashes Cement Lime	Filter sleeve cleaning. Suitable for outdoor use. Resistant to oxidation. Atex II2G c Tx Atex II2D c Tx	Economical Low air consumption High frequency vibration
ROLLER VIBRATORS **OR** 	Silos Hoppers Piping Chutes Concrete compaction	**Hygroscopic powders.** Cement Concrete Sand Foundry sand	Compact and robust design. Suitable for outdoor use. Resistant to oxidations. Atex II2G c Tx Atex II2D c Tx	High centrifugal force Low air consumption High frequency vibration Suitable for high temperature
TURBINE VIBRATORS **OT** 	Silos Hoppers Piping Chutes	**Food powders.** Sugar Bicarbonate Phosphate Sodium	Suitable for food and pharmaceutical applications. Resistant to oxidation. Atex II2G c Tx Atex II2D c Tx	High performance Silent Low air consumption

APPLICATIONS

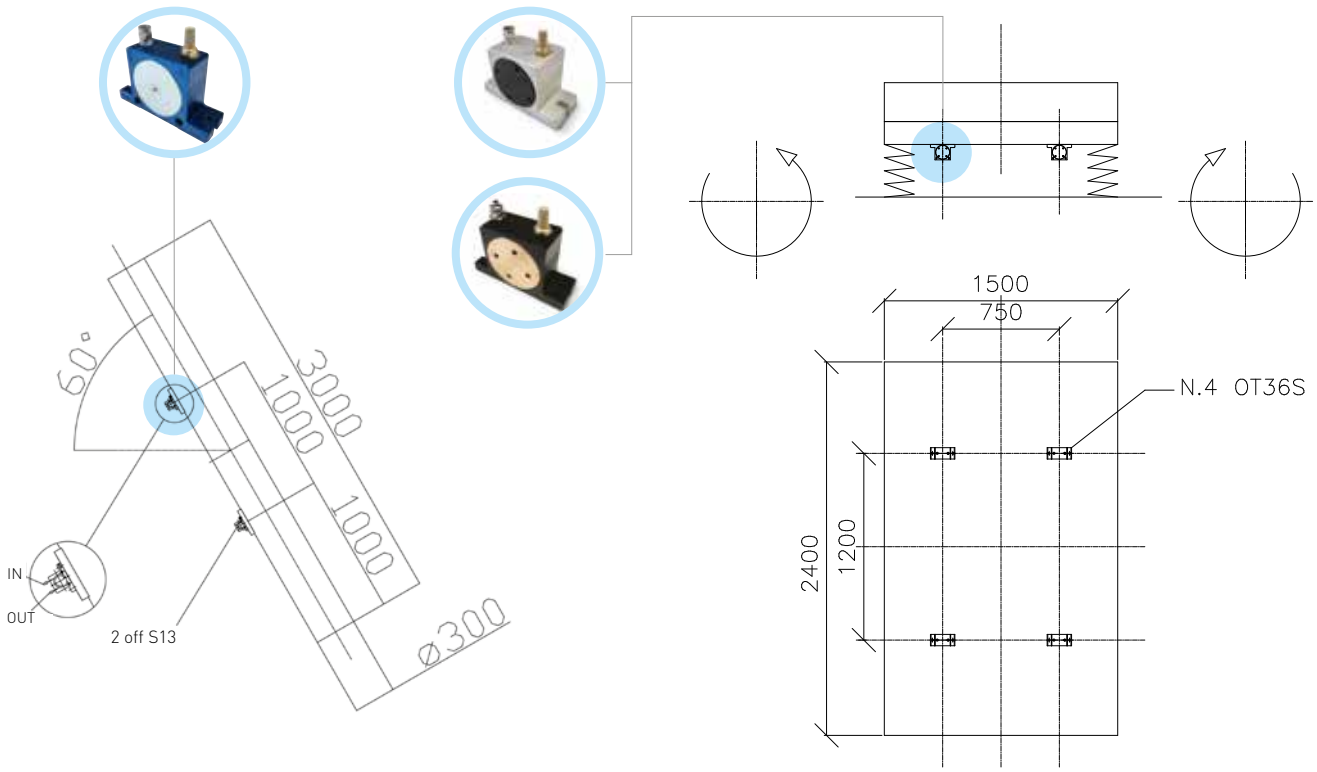

S - Rotary pneumatic vibrators - Ball

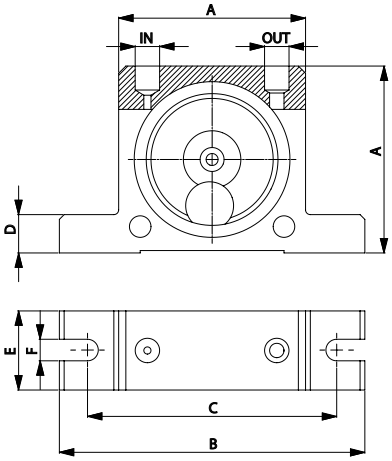

DIMENSIONAL SPECIFICATIONS															
MODEL	A		B		C		D		E		F		IN-OUT	WEIGHT	
	mm	in	mm	in	mm	in	mm	in	mm	in	mm	in		kg	lb
S8	50	2.0	86	3.4	68	2.7	12	0.5	20	0.8	7	0.3	1/8" BSPP	0.13	0.29
S10	50	2.0	86	3.4	68	2.7	12	0.5	20	0.8	7	0.3	1/8" BSPP	0.13	0.29
S13	65	2.6	113	4.5	90	3.5	16	0.6	25	1.0	9	0.4	1/4" BSPP	0.26	0.57
S16	65	2.6	113	4.5	90	3.5	16	0.6	28	1.1	9	0.4	1/4" BSPP	0.30	0.66
S20	80	3.2	128	5.1	104	4.1	16	0.6	33	1.3	9	0.4	1/4" BSPP	0.53	1.17
S25	80	3.2	128	5.1	104	4.1	16	0.6	38	1.5	9	0.4	1/4" BSPP	0.63	1.39
S30	100	3.9	160	6.3	130	5.1	20	0.8	45	1.8	11	0.4	3/8" BSPP	1.13	2.49
S36	100	3.9	160	6.3	130	5.1	20	0.8	50	2.0	11	0.4	3/8" BSPP	1.34	2.95

MODEL	VIBRATION			F.C. MAX						AIR CONSUMPTION					
	Vpm			2 bar (29 psi)		4 bar (58psi)		6 bar (87 psi)		2 bar (29 psi)		4 bar (58psi)		6 bar (87 psi)	
	2 bar (29 psi)	4 bar (58psi)	6 bar (87 psi)	kg	lb	kg	lb	kg	lb	l/min	CF/min	l/min	CF/min	l/min	CF/min
S8	25500	31000	35000	13	29	26	57	36	79	83	2.9	145	5.1	195	6.9
S10	22500	28000	34000	25	55	47	103	71	156	92	3.2	150	5.3	200	7.1
S13	15000	18500	22500	32	70	55	121	87	191	94	3.3	158	5.6	225	7.9
S16	13000	17000	19500	45	99	80	176	110	242	122	4.3	200	7.1	280	9.9
S20	10500	14500	16500	72	158	122	268	172	378	130	4.6	230	8.1	340	12.0
S25	9200	12200	14000	93	205	157	345	205	451	160	5.7	290	10.2	425	15.0
S30	7800	9700	12500	151	332	247	543	321	706	215	7.6	375	13.2	570	20.1
S36	7300	9000	10000	206	453	315	693	405	891	260	9.2	475	16.8	675	23.8

S - ROTARY PNEUMATIC VIBRATORS - BALL

APPLICATION	Hopper and silo - screen - vibrating table - chute
POWDER	Dry and granular
PROBLEM SOLVING	Friction reduction - separation

FEATURES

DUTY CYCLE	Continuous
WORKING PRESSURE	From 2 bar to 6 bar (from 29 psi to 87 psi)
PNEUMATIC CIRCUIT	Filter + flow control valve + lubrification + 3/2 ways valve
AIR SUPPLY QUALITY	Class 5.4.4.
WORKING TEMPERATURE	From -20 °C to 200 °C (from -4 °F to 392 °F)
MAX NOISE LEVEL	90 dB(a)
TECHNOLOGY	Rotary vibration - high frequency
ATEX	II 2D C TX II 2G C TX
MATERIAL	Aluminium body and zinc plate cover

This information is furnished without warranty, representation, inducement or license of any kind. It is accurate to the best OLI knowledge or is obtained from sources believed to be accurate. OLI therefore assumes no legal responsibility.

OR - Rotary pneumatic vibrators - Roller

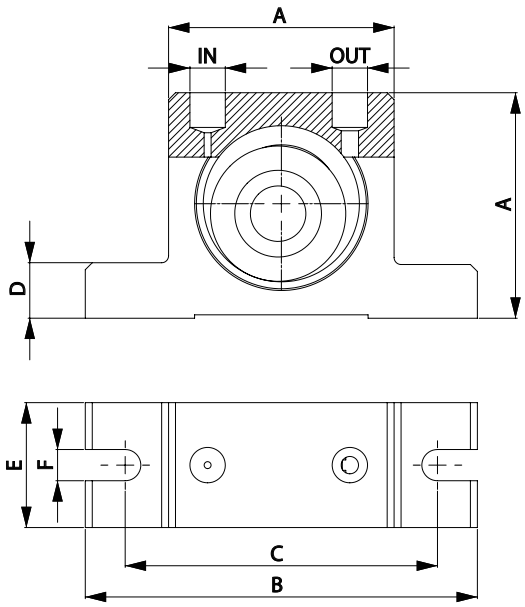

DIMENSIONAL SPECIFICATIONS															
MODEL	A		B		C		D		E		F		IN-OUT	WEIGHT	
	mm	in	mm	in	mm	in	mm	in	mm	in	mm	in		kg	lb
OR50	50	2.0	86	3.4	68	2.7	12	0.5	30	1.2	7	0.3	1/8" BSPP	0.37	0.81
OR65	65	2.6	113	4.5	90	3.5	16	0.6	36	1.4	9	0.4	1/4" BSPP	0.76	1.67
OR80	80	3.2	128	5.1	102	4.0	16	0.6	40	1.6	9	0.4	1/4" BSPP	1.27	2.79
OR100	100	3.9	160	6.3	130	5.1	20	0.8	52	2.1	11	0.4	1/4"-3/8" BSPP	2.60	5.72

MODEL	VIBRATION			F.C. MAX						AIR CONSUMPTION					
	Vpm			2 bar (29 psi)		4 bar (58psi)		6 bar (87psi)		2 bar (29 psi)		4 bar (58psi)		6 bar (87psi)	
	2 bar (29 psi)	4 bar (58psi)	6 bar (87psi)	kg	lb	kg	lb	kg	lb	l/min	CF/min	l/min	CF/min	l/min	CF/min
OR50	21000	25000	29500	188	413	281	619	355	780	78	2.8	144	5.1	204	7.2
OR65	19000	22000	26000	235	516	439	966	552	1215	100	3.5	198	7.0	296	10.5
OR80	14000	16000	21500	342	752	587	1292	624	1373	122	4.3	255	9.0	378	13.3
OR100	6750	9750	11000	289	637	604	1329	783	1722	132	4.7	284	10.0	412	14.5

OR - ROTARY PNEUMATIC VIBRATORS - ROLLER

APPLICATION	Hopper and silo - piping - chute - concrete compaction
POWDER	Hygroscopic
PROBLEM SOLVING	Friction reduction - compaction

FEATURES

DUTY CYCLE	Continuous
WORKING PRESSURE	From 2 bar to 6 bar (from 29 psi to 87 psi)
PNEUMATIC CIRCUIT	Filter + flow control valve + lubrification + 3/2 ways valve
AIR SUPPLY QUALITY	Class 5.4.4.
WORKING TEMPERATURE	From -20 °C to 200 °C (from -4 °F to 392 °F)
MAX NOISE LEVEL	<90 dB(a)
TECHNOLOGY	Roller vibration - high frequency and centrifugal force
ATEX	II 2D C TX II 2G C TX
MATERIAL	Aluminium body and brass cover

This information is furnished without warranty, representation, inducement or license of any kind. It is accurate to the best OLI knowledge or is obtained from sources believed to be accurate. OLI therefore assumes no legal responsibility.

OT - Rotary pneumatic vibrators - Turbine

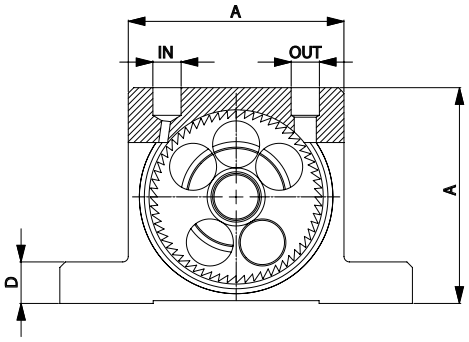

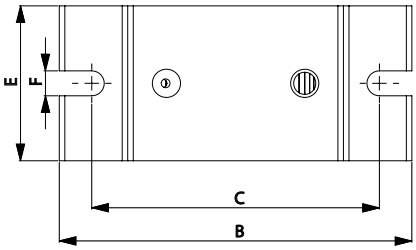

DIMENSIONAL SPECIFICATIONS															
MODEL	A		B		C		D		E		F		IN-OUT	WEIGHT	
	mm	in	mm	in	mm	in	mm	in	mm	in	mm	in		kg	lb
OT8	50	2.0	86	3.4	68	2.7	12	0.5	33	1.3	7	0.3	1/8" BSPP	0.25	0.55
OT10	50	2.0	86	3.4	68	2.7	12	0.5	33	1.3	7	0.3	1/8" BSPP	0.26	0.56
OT10S	50	2.0	86	3.4	68	2.7	12	0.5	33	1.3	7	0.3	1/8" BSPP	0.26	0.58
OT13	65	2.6	113	4.5	90	3.5	16	0.6	42	1.7	9	0.4	1/4" BSPP	0.57	1.24
OT16	65	2.6	113	4.5	90	3.5	16	0.6	42	1.7	9	0.4	1/4" BSPP	0.58	1.28
OT16S	65	2.6	113	4.5	90	3.5	16	0.6	42	1.7	9	0.4	1/4" BSPP	0.61	1.35
OT20	80	3.2	128	5.0	104	4.1	16	0.6	56	2.2	9	0.4	1/4" BSPP	1.09	2.40
OT25	80	3.2	128	5.0	104	4.1	16	0.6	56	2.2	9	0.4	1/4" BSPP	1.12	2.46
OT25S	80	3.2	128	5.0	104	4.1	16	0.6	56	2.2	9	0.4	1/4" BSPP	1.20	2.64
OT30	100	3.9	160	6.3	130	5.1	20	0.8	73	2.9	11	0.4	3/8" BSPP	2.20	4.84
OT36	100	3.9	160	6.3	130	5.1	20	0.8	73	2.9	11	0.4	3/8" BSPP	2.30	5.06
OT36S	100	3.9	160	6.3	130	5.1	20	0.8	73	2.9	11	0.4	3/8" BSPP	2.53	5.57

MODEL	VIBRATION			F.C. MAX						AIR CONSUMPTION					
	Vpm			2 bar (29 psi)		4 bar (58psi)		6 bar (87psi)		2 bar (29 psi)		4 bar (58psi)		6 bar (87psi)	
	2 bar (29 psi)	4 bar (58psi)	6 bar (87psi)	kg	lb	kg	lb	kg	lb	l/min	CF/min	l/min	CF/min	l/min	CF/min
OT8	34000	38000	42000	110	242	205	451	292	641	45	1.6	81	2.9	110	3.9
OT10	26000	33000	38000	105	231	171	377	252	554	45	1.6	81	2.9	110	3.9
OT10S	17200	23400	26000	72	159	147	323	187	410	45	1.6	81	2.9	110	3.9
OT13	24500	28500	31000	202	444	263	579	300	659	122	4.3	204	7.2	285	10.1
OT16	18000	20000	21000	194	427	239	527	264	581	122	4.3	204	7.2	285	10.1
OT16S	11500	15000	17500	129	285	196	431	234	516	122	4.3	204	7.2	285	10.1
OT20	14500	19000	23000	251	552	404	888	526	1157	184	6.5	318	11.2	452	16.0
OT25	13200	15500	17000	244	537	336	740	508	1117	184	6.5	318	11.2	452	16.0
OT25S	9000	11000	13500	214	471	335	738	483	1063	184	6.5	318	11.2	452	16.0
OT30	11000	12500	14500	351	771	721	1586	781	1718	322	11.4	542	19.1	749	26.5
OT36	8500	11500	12000	341	751	698	1536	749	1648	322	11.4	542	19.1	749	26.5
OT36S	6000	7000	8500	406	893	706	1554	754	1660	322	11.4	542	19.1	749	26.5

OT - ROTARY PNEUMATIC VIBRATORS - TURBINE

APPLICATION	Hopper and silo - screen - vibrating table - chute - concrete consolidation
POWDER	Dry and granular (food) - concrete
PROBLEM SOLVING	Friction reduction - separation - consolidation

FEATURES

DUTY CYCLE	Continuous
WORKING PRESSURE	From 2 bar to 6 bar (from 29 psi to 87 psi)
PNEUMATIC CIRCUIT	Filter + flow control valve + 3/2 ways valve
AIR SUPPLY QUALITY	Class 5.4.1.
WORKING TEMPERATURE	From -20 °C to 120 °C (from -4 °F to 248 °F)
MAX NOISE LEVEL	<90 dB(a)
TECHNOLOGY	Turbine vibration - high frequency and centrifugal force
ATEX	II 2D C TX II 2G C TX
MATERIAL	Aluminium body

This information is furnished without warranty, representation, inducement or license of any kind. It is accurate to the best OLI knowledge or is obtained from sources believed to be accurate. OLI therefore assumes no legal responsibility.

EXTERNAL APPLICATION

ELECTRIC VIBRATORS

PRODUCT SERIES	APPLICATIONS	POWDERS	FEATURES	BENEFITS
2 POLES MICRO **MVE-MICRO** 	Small hoppers Micro-screens Chutes Vibrating feeders, tables and channels	**Fine, dry powder.** Plastics Sugar Bicarbonate Seeds	Compact, uni-body, heavy-duty design. Supplied with stainless steel covers in standard version. Atex II2D T100 °C.	Economical Easy to install Single phase cable with built-in capacitor Adjustable force
2 POLES **MVE** 	Silos Hoppers Dispensers Agitators Mixers Filter cleaning Vibrating feeders and tables	**Fine and dry powders, granules.** Cement Flour Grit Sugar	Suitable for indoor and outdoor use. Silos and hoppers of any material and capacity from 200 to 10,000 kg. Atex II2D T100 °C.	Economical Wide range Special windings for different geographical areas Adjustable force
DIRECT CURRENT **MVE-DC** 	Automotive Hoppers Salt and manure spreaders Dump trucks Concrete pump grids	**Granular powders.** Concrete Fertilizers Corn Soy Rice Seeds Salt Sand	Stainless steel covers. DC Motor 3,000 RPM 12V-24V. Power from 80 to 520 W. Resistant to oxidation.	Economical Robust Safe Terminal box connection sealed (option) Adjustable force

APPLICATIONS

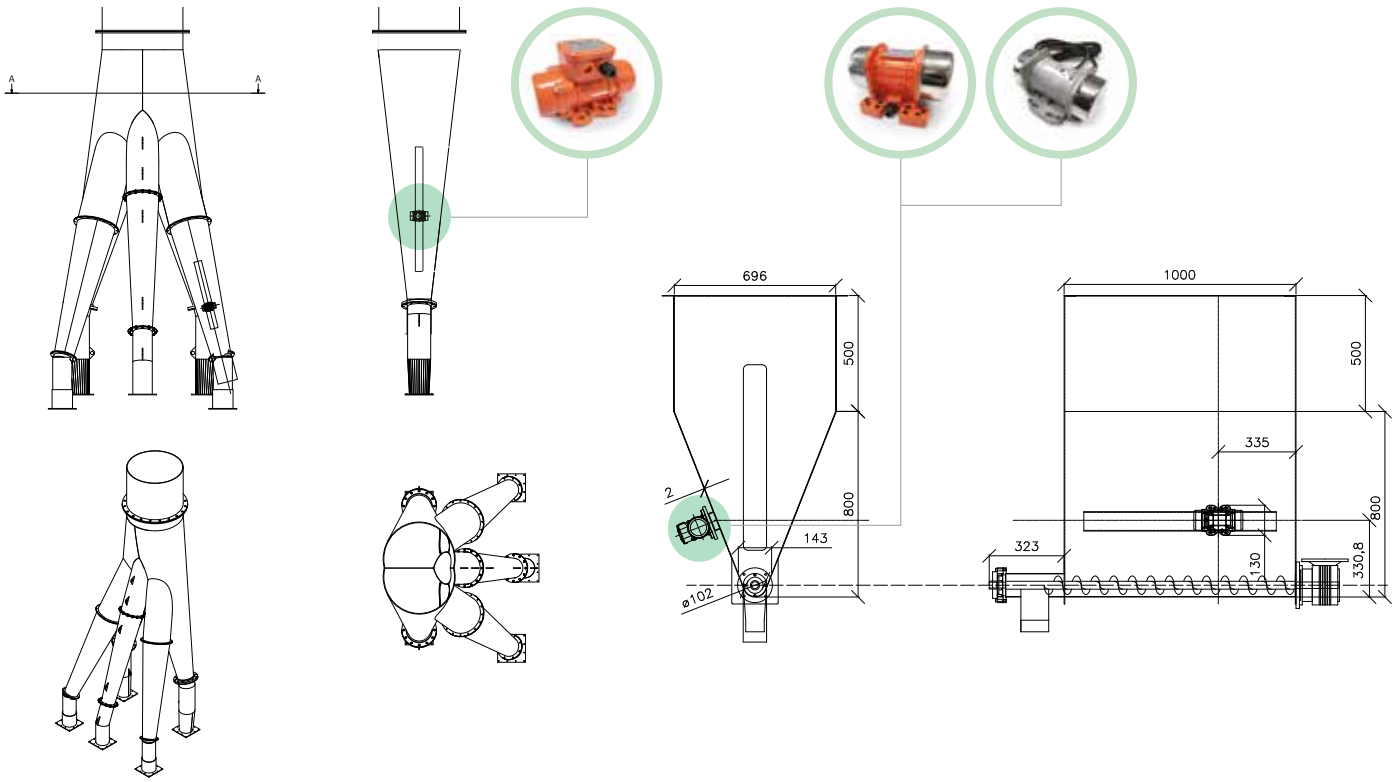

MVE-MICRO - 2 poles electric vibrators

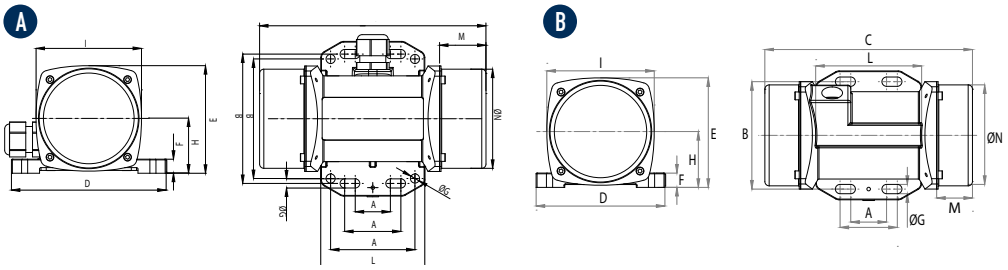

DIMENSIONAL SPECIFICATIONS																														
MODEL		DRAW.	C		M		A		B		Ø G		HOLES	D		E		F		H		I		L		N		SCREW	
50 / 60 Hz	60 Hz USA		mm	in	mm	in	mm	in	mm	in	mm	in	n°	mm	in	mm	in	mm	in	mm	in	mm	in	mm	in	mm	in	Metric	in
MICRO 3M	MVE 0003	A	145	5.7	25	1.0	25-40	1-1.6	92	3.6	6.5	0.3	4	110	4.3	76.5	3.0	10	0.4	39	1.5	75	3.0	74	2.9	70.5	2.8	M5	3/16"
							60	2.4	85	3.3	6.5	0.3																	
MICRO 6M	MVE 0006	B	145	5.7	25	1.0	25-40	1-1.6	75	3.0	6.5	0.3	4	90	3.5	76.5	3.0	10	0.4	39	1.5	75	3.0	74	2.9	70.5	2.8	M5	3/16"
							-	-	-	-	-	-																	
MICRO 21, 21M	MVE 0021	A	145	5.7	25	1.0	25-40	1-1.6	92	3.6	6.5	0.3	4	110	4.3	76.5	3.0	10	0.4	39	1.5	75	3.0	74	2.9	70.5	2.8	M5	3/16"
							60	2.4	85	3.3	6.5	0.3																	
MICRO 41, 41M	MVE 0041	A	161	6.3	33	1.3	25-40	1-1.6	92	3.6	6.5	0.3	4	110	4.3	76.5	3.0	10	0.4	39	1.5	75	3.0	74	2.9	70.5	2.8	M5	3/16"
							60	2.4	85	3.3	6.5	0.3																	

MVE-MICRO THREE PHASE - 3000 RPM 400V 50HZ / 3600 RPM 460V 60HZ

MODEL			WORKING MOMENT				CENTRIFUGAL FORCE				WEIGHT		ELECTRIC FEATURES									
			kgcm		inlb		kg		lb				POWER				CURRENT			COSΦ		
													kW		Hp		A max					
			50Hz	60Hz	50Hz	60Hz	50Hz	60Hz	50Hz	60Hz	kg	lb	50Hz	60Hz	50Hz	60Hz	230V	400V	460V	230V	400V	460V
50 Hz	60 Hz	60 Hz - USA															50Hz	50Hz	60Hz	50Hz	50Hz	60Hz
MICRO 21	MICRO 21/36	MVE.0021.36.460	0.40	0.40	0.35	0.35	20	29	44	64	2.0	4.4	0.04	0.04	0.05	0.05	0.16	0.12	0.12	0.45	0.45	0.42
MICRO 41	MICRO 41/36	MVE.0041.36.460	0.90	0.90	0.78	0.78	45	65	99	143	2.4	5.3	0.06	0.06	0.08	0.08	0.30	0.18	0.18	0.44	0.44	0.40

MVE-MICRO SINGLE PHASE - 3000 RPM 230V 50HZ / 3600 RPM 115V 60HZ

MODEL			WORKING MOMENT				CENTRIFUGAL FORCE				WEIGHT		ELECTRICAL FEATURES							
			kgcm		inlb		kg		lb				POWER				CURRENT		COSΦ	
													Kw		Hp		A max			
			50Hz	60Hz	50Hz	60Hz	50Hz	60Hz	50Hz	60Hz	kg	lb	50Hz	60Hz	50Hz	60Hz	230V	115V	230V	115V
50 Hz	60 Hz	60 Hz - USA															50Hz	60Hz	50Hz	60Hz
MICRO 3M	MICRO 3/36M	MVE.0003.36.115	0.08	0.08	0.07	0.07	4	6	9	13	1.6	3.5	0.03	0.04	0.04	0.05	0.30	0.80	0.43	0.43
MICRO 6M	MICRO 6/36M	MVE.0006.36.115	0.12	0.12	0.10	0.10	6	9	13	20	1.6	3.5	0.03	0.04	0.04	0.05	0.30	0.80	0.43	0.43
MICRO 21M	MICRO 21/36M	MVE.0021.36.115	0.40	0.40	0.35	0.35	20	29	44	64	2.0	4.4	0.04	0.07	0.05	0.09	0.20	0.80	0.80	0.80
MICRO 41M	MICRO 41/36M	MVE.0041.36.115	0.90	0.90	0.78	0.78	45	65	99	143	2.4	5.3	0.05	0.07	0.07	0.09	0.25	0.80	0.80	0.80

MVE-MICRO - 2 POLES ELECTRIC VIBRATORS - THREE PHASE OR SINGLE PHASE

APPLICATION	Small hopper - micro screen - chute - vibrating feeder table and channels
POWDER	Fine - dry
PROBLEM SOLVING	Bridge and rat-holing

FEATURES

DUTY CYCLE	Continuous - S1
ENVIRONMENT TEMPERATURE	From -20 °C to 40 °C (from -4 °F to 104 °F)
MAX NOISE LEVEL	76 dB(A)
ATEX	II3D Ex tc IIIC Tx IP 66
MATERIAL	Body aluminium - stainless steel cover
CAPACITOR	MICRO 21 - 115v µF 4, 220v 50/60Hz µF1,5 | MICRO 41 - 115v µF 4, 220v 50/60Hz µF3

OPTIONS

ATEX	Ex II 2D Ex tb IIIC Tx Db IP 66 Ex tb IIIC Tx Db IP66
CUSTOMISED CABLE	Available

This information is furnished without warranty, representation, inducement or license of any kind. It is accurate to the best OLI knowledge or is obtained from sources believed to be accurate. OLI therefore assumes no legal responsibility.

MVE - 2 poles electric vibrators

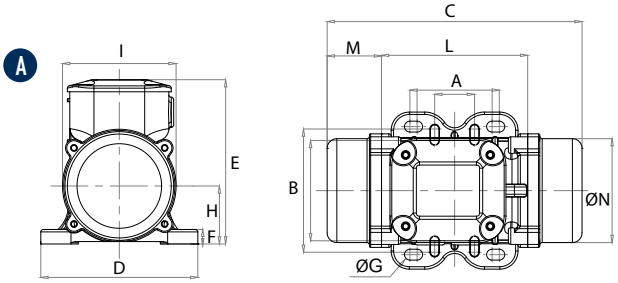

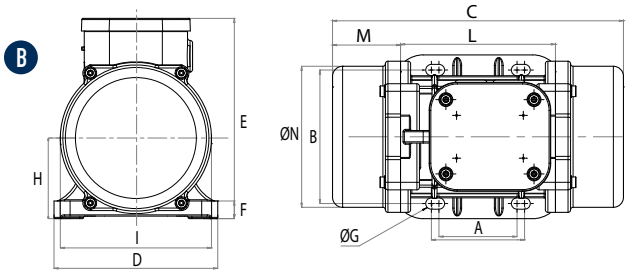

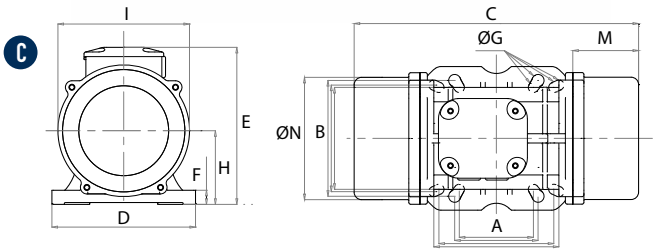

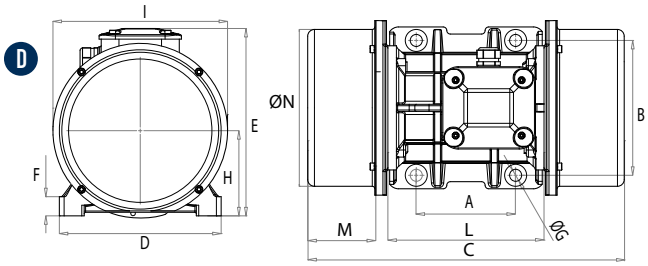

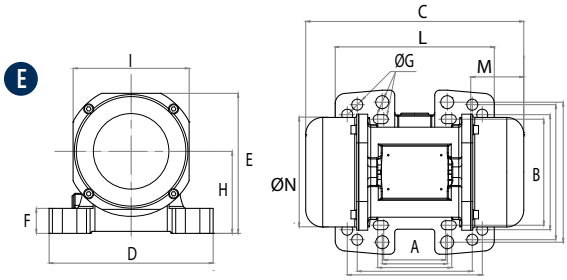

DIMENSIONAL SPECIFICATIONS

THREE PHASE		SINGLE PHASE	DRAWING	SIZE	C		M		A		B		Ø G		HOLES	D		E		F		H		I		L		N		WEIGHT	
50 / 60 Hz	U.S. 60 Hz	50 / 60 Hz			mm	in	mm	in	mm	in	mm	in	mm	in		mm	in	mm	in	mm	in	mm	in	mm	in	mm	in	mm	in	kg	lb
MVE 60/3	MVE 160/2	MVE 60/3M	A	10	211	8.3	45	1.8	62-74	2.4-2.9	106	4.2	9	0.4	4	130	5.1	136	5.4	12	0.5	48	1.9	94	3.7	121	4.8	85	3.4	4.2	9.3
MVE 100/3	MVE 220/2	MVE 100/3M	A	10	211	8.3	45	1.8	33	1.3	83-102	3.3-4.0	7	0.3	4	130	5.1	136	5.4	12	0.5	48	1.9	94	3.7	121	4.8	85	3.4	4.6	10.1
MVE 200/3	MVE 440/2	MVE 200/3M	B	20	231	9.1	54	2.1	62-74	2.4-2.9	106	4.2	9	0.4	4	131	5.2	159	6.3	15	0.6	64	2.5	121	4.8	123	4.8	112	4.4	7.0	15.4
MVE 202/3	MVE 444/2	MVE 202/3M	E	23	218	8.6	53	2.1	62-74	2.4-2.9	106	4.2	9	0.4	4	164	6.5	140	5.5	25	1.0	82	3.2	116	4.6	159	6.3	110	4.3	7.2	15.9
									65	2.6	140	5.5	13	0.5																	
									115	4.5	135	5.3	11	0.4																	
									135	5.3	115	4.5	11	0.4																	
MVE 300/3	MVE 690/2	MVE 300/3M	C	30	253	10.0	45	1.8	80	3.2	110	4.3	11	0.4	4	154	6.1	175	6.9	15	0.6	79	3.1	142	5.6	163	6.4	131	5.2	9.8	21.6
									90	3.5	125	4.9	13	0.5																	
MVE 400/3	MVE 890/2	-	C	30	273	10.8	55	2.2	124	4.9	110	4.3	11	0.4	4	154	6.1	175	6.9	15	0.6	79	3.1	142	5.6	163	6.4	131	5.2	10.3	22.7
									135	5.3	115	4.5	11	0.4																	
MVE 500/3	MVE 1200/2	-	D	40	334	13.2	78	3.1	105	4.1	140	5.5	13	0.5	4	168	6.6	196	7.7	22	0.9	92	3.6	169	6.7	178	7.0	158	6.2	15.8	34.8
MVE 700/3	MVE 1700/2	-	D	40	334	13.2	78	3.1	105	4.1	140	5.5	13	0.5	4	168	6.6	196	7.7	22	0.9	92	3.6	169	6.7	178	7.0	158	6.2	16.5	36.4
MVE 800/3	MVE 1800/2	-	D	50	321	12.6	58	2.3	120	4.7	170	6.7	17	0.7	4	208	8.2	210	8.3	22	0.9	94	3.7	180	7.1	205	8.1	170	6.7	20.6	45.4

This information is furnished without warranty, representation, inducement or license of any kind. It is accurate to the best OLI knowledge or is obtained from sources believed to be accurate. OLI therefore assumes no legal responsibility.

MVE THREE PHASE

MODEL		WORKING MOMENT				CENTRIFUGAL FORCE				ELECTRICAL FEATURES												
										POWER				CURRENT		COSΦ		IA/IN		CLASSII DIV.2	II 2D	CABLE GLAND
		kgcm		inlb		kg		lb		kW		hp		A max (Y)								
		50Hz	60Hz	50Hz	60Hz	50Hz	60Hz	50Hz	60Hz	50Hz	60Hz	50Hz	60 H	400V	460V	50Hz	60Hz	50Hz	60Hz	Temp. Class	Temp. Class	Class Temp.
50 /60 Hz	U.S. 60 Hz													50Hz	60Hz					T	(°C)	
MVE 60/3	MVE 160/2	1.3	0.9	1.1	0.9	66	71	145	156	0.08	0.09	0.11	0.12	0.16	0.18	0.74	0.82	3.0	3.0	T4	100	M16 80 °C
MVE 100/3	MVE 220/2	1.9	1.3	1.7	1.1	98	95	216	209	0.1	0.11	0.13	0.15	0.19	0.18	0.76	0.85	3.0	3.0	T4	100	M16 80 °C
MVE 200/3	MVE 440/2	3.7	2.6	3.2	2.3	187	189	412	417	0.18	0.21	0.24	0.28	0.35	0.35	0.78	0.87	3.3	3.3	T4	100	M20 80 °C
MVE 202/3	MVE 444/2	3.7	2.6	3.2	2.3	187	189	412	417	0.18	0.21	0.24	0.28	0.35	0.35	0.78	0.87	3.3	3.3	T4	100	M20 80 °C
MVE 300/3	MVE 690/2	6.4	4.5	5.5	3.9	321	323	708	712	0.27	0.28	0.36	0.38	0.52	0.45	0.84	0.89	3.6	3.5	T4	100	M20 80 °C
MVE 400/3	MVE 890/2	7.9	5.7	6.9	4.9	407	411	897	906	0.30	0.36	0.40	0.48	0.58	0.60	0.88	0.88	3.5	3.5	T4	100	M20 80 °C
MVE 500/3	MVE 1200/2	10.3	7.4	8.9	6.4	530	534	1168	1177	0.50	0.58	0.67	0.78	0.96	0.97	0.84	0.87	4.0	4.2	T4	100	M20 80 °C
MVE 700/3	MVE 1700/2	14.9	10.6	12.9	9.2	758	765	1671	1686	0.66	0.75	0.89	1.01	1.25	1.24	0.83	0.88	4.3	5.0	T4	100	M20 80 °C
MVE 800/3	MVE 1800/2	15.7	11.1	13.6	9.6	794	800	1750	1764	0.75	0.90	1.01	1.21	1.45	1.50	0.79	0.84	3.8	3.8	T4	100	M20 80 °C

MVE SINGLE PHASE

MODEL			WORKING MOMENT				CENTRIFUGAL FORCE				ELECTRICAL FEATURES												
											POWER				CURRENT			CAPACITOR			CLASSII DIV.2	II 2D	CABLE GLAND
			kgcm		inlb		kg		lb		kW		hp		A max			µF					
50 Hz	60 Hz	60 Hz U.S. Market	50Hz	60Hz	50Hz	60Hz	50Hz	60Hz	50Hz	60Hz	50Hz	60Hz	50Hz	60Hz	230V	220V	115V	220V	220V	115V	Temp. Class	Temp. Class	Class
															50Hz	60Hz	60Hz	50Hz	60Hz	60Hz	T	(°C)	Temp.
MVE 60/3M	MVE 60/36M	MVE 160/2M	1.3	1.0	1.1	0.9	66	71	145	156	0.08	0.09	0.11	0.12	0.43	0.43	1.03	3.0	3.0	6.3	T4	100	M16 80 °C
MVE 100/3M	MVE 100/36M	MVE 220/2M	1.9	1.3	1.7	1.1	98	95	216	209	0.10	0.11	0.13	0.15	0.54	0.54	1.30	4.0	4.0	8.0	T4	100	M16 80 °C
MVE 200/3M	MVE 200/36M	MVE 440/2M	3.7	2.6	3.2	2.3	187	189	412	417	0.18	0.21	0.24	0.28	1.14	1.14	2.62	8.0	8.0	16.0	T4	100	M20 80 °C
MVE 202/3M	MVE 202/36M	MVE 444/2M	3.7	2.6	3.2	2.3	187	189	412	417	0.18	0.21	0.24	0.28	1.14	1.14	2.62	8.0	8.0	16.0	T4	100	M20 80 °C
MVE 300/3M	MVE 300/36M	MVE 690/2M	6.4	4.4	5.5	3.9	321	323	708	712	0.27	0.28	0.36	0.38	1.58	1.58	3.43	12.5	12.5	25.0	T4	100	M20 80 C

MVE - 2 POLES ELECTRIC VIBRATORS - THREE PHASE OR SINGLE PHASE

APPLICATION	Hopper and silo - feeder - screen
POWDER	Fine - dry granular
PROBLEM SOLVING	Bridge and rat-holing

FEATURES

DUTY CYCLE	Continuous - S1
FREQUENCY RANGE	From 20Hz to 60Hz [with inverter]
ENVIRONMENT TEMPERATURE	From -20 °C to 40 °C (from -4 °F to 104 °F)
MAX NOISE LEVEL	76 dB(a)
ATEX	II3D Ex tc IIIC Tx IP66
MATERIAL	Aluminium body; aluminium (powder painted) cover

ACCESSORIES

CAPACITOR	Available

OPTIONS

ATEX	Ex II 2D Ex t IIIC Tx Db IP66 Ex tb IIIC Tx Db IP66
CUSTOMISED CABLE	Available

This information is furnished without warranty, representation, inducement or license of any kind. It is accurate to the best OLI knowledge or is obtained from sources believed to be accurate. OLI therefore assumes no legal responsibility.

MVE-DC - Direct current electric vibrators

A

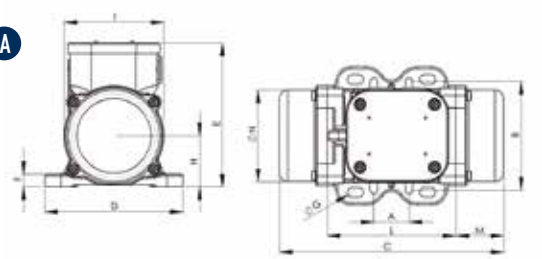

B

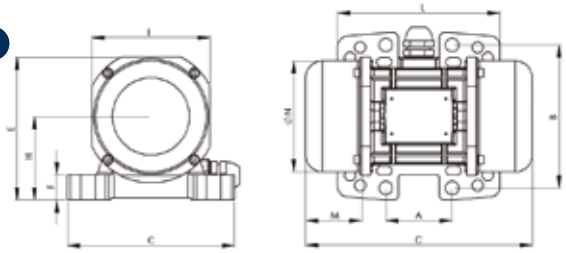

C

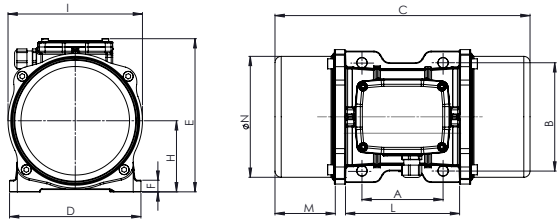

DIMENSIONAL SPECIFICATIONS

MODEL	DRAWING	SIZE	C		M		A		B		Ø G		HOLES	D		E		F		H		I		L		N	
			mm	in	mm	in	mm	in	mm	in	mm	in		mm	in	mm	in	mm	in	mm	in	mm	in	mm	in	mm	in
			50Hz	50Hz	50Hz	50Hz							N°														
MVE 50 DC 24	A	10	211	8.3	45	1.8	62-74	2.4-2.9	106	4.2	9	0.4	4	130	5.1	136	5.4	12	0.5	48	1.9	94	3.7	121	4.8	85	3.4
MVE 50 DC 12	A	10	211	8.3	45	1.8	33	1.3	83-102	3.3-4.0	7	0.3	4	130	5.1	136	5.4	12	0.5	48	1.9	94	3.7	121	4.8	85	3.4
MVE 120 DC 24	B	23	218	8.6	53	2.1	62-74	2.4-2.9	106	4.2	9	0.4	4	164	6.5	140	5.5	25	1.0	82	3.2	116	4.6	159	6.3	110	4.3
MVE 120 DC 12	B	23	218	8.6	53	2.1	65	2.6	140	5.5	13	0.5	4	164	6.5	140	5.5	25	1.0	82	3.2	116	4.6	159	6.3	110	4.3
MVE 202 DC 24	B	23	218	8.6	53	2.1	115	4.5	135	5.3	11	0.4	4	164	6.5	140	5.5	25	1.0	82	3.2	116	4.6	159	6.3	110	4.3
MVE 202 DC 12	B	23	218	8.6	53	2.1	135	5.3	115	4.5	11	0.4	4	164	6.5	140	5.5	25	1.0	82	3.2	116	4.6	159	6.3	110	4.3
MVE 500 DC 24	C	40	330	13.0	78	3.1	105	4.1	140	5.5	13	0.5	4	170	6.6	196	7.7	15	0.6	92	3.6	174	6.8	174	6.9	160	6.3
MVE 1500 DC 24	C	50	324	12.8	63	2.5	120	4.7	170	6.7	18	0.7	4	208	8.2	210	8.3	18	0.7	96	3.8	184	7.2	198	7.8	169	6.7

MODEL	RPM	WORKING MOMENT		CENTRIFUGAL FORCE		WEIGHT		ELECTRICAL SPECIFICATIONS: POWER		MAX CURRENT	Ex II 3D	CABLE TYPE	CABLE GLAND
		kgcm	inlb	kg	lb	kg	lb	kW	Hp	A	Temp. Class (°C)	Class Temp	Class Temp
MVE 50 DC 24	3000	1.02	0.89	50	110	4.4	9.7	0.08	0.11	3.3	100	2Gx1.5 90°C	M16 80 °C
MVE 50 DC 12	3000	1.02	0.89	50	110	4.4	9.7	0.08	0.11	6.6	100	2Gx1.5 90°C	M16 80 °C
MVE 120 DC 24	3000	2.14	1.86	117	258	7.2	15.9	0.11	0.15	4.8	100	2Gx1.5 90°C	M20 80 °C
MVE 120 DC 12	3000	2.14	1.86	117	258	7.2	15.9	0.11	0.15	9.6	100	2Gx1.5 90°C	M20 80 °C
MVE 202 DC 24	3000	4.17	3.62	200	441	7.2	15.9	0.16	0.21	6.7	100	2Gx1.5 90°C	M20 80 °C
MVE 202 DC 12	3000	4.17	3.62	200	441	7.2	15.9	0.16	0.21	13.3	100	2Gx1.5 90°C	M20 80 °C
MVE 500 DC 24	3000	10.40	9.03	530	1168	14.4	31.7	0.26	0.35	11.0	100	2Gx1.5 90°C	M20 80 °C
MVE 1500 DC 24	3000	22.40	19.44	1616	3563	21.8	48.1	0.52	0.70	21.5	100	2Gx1.5 90°C	M20 80 °C

MVE-DC - DIRECT CURRENT ELECTRIC VIBRATORS

APPLICATION	Dump truck - Concrete pump - automotive hopper - salt spreader - dump trailer
POWDER	Granular - Concrete
PROBLEM SOLVING	Bridge and rat-holing

FEATURES

DUTY CYCLE	Continuous - S1
ENVIRONMENT TEMPERATURE	From -20 °C to 40 °C (from -4 °F to 104 °F)
MAX NOISE LEVEL	76 dB(a)
ATEX	II3D Ex tc IIIC Tx IP 66
MATERIAL	Body aluminium - stainless steel /aluminium (powder painted) cover

OPTIONS

CUSTOMISED CABLE	Available

This information is furnished without warranty, representation, inducement or license of any kind. It is accurate to the best OLI knowledge or is obtained from sources believed to be accurate. OLI therefore assumes no legal responsibility.

MVE-DC - Direct current electric vibrators - For industrial sweepers

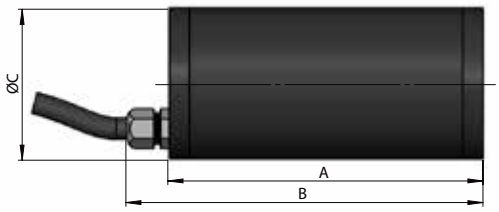

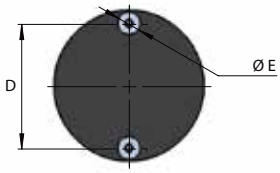

DIMENSIONAL SPECIFICATIONS										
MODEL	A		B		Ø C		D		Ø E	
	mm	in	mm	in	mm	in	mm	in	mm	in
MVE60DC 12	167	6.6	189	7.4	80	3.1	66	2.6	12	0.5
MVE60DC 24	167	6.6	189	7.4	80	3.1	66	2.6	12	0.5
MVE60DC 36	167	6.6	189	7.4	80	3.1	66	2.6	12	0.5
MVE100DC 12	207	8.1	230	9.1	80	3.1	66	2.6	12	0.5
MVE100DC 24	207	8.1	230	9.1	80	3.1	66	2.6	12	0.5
MVE100DC 36	207	8.1	230	9.1	80	3.1	66	2.6	12	0.5

										ELECTRICAL SPECIFICATIONS
MODEL	rpm	WORKING MOMENT		CENTRIFUGAL FORCE		WEIGHT		INPUT POWER		MAX CURRENT
		kgcm	inlb	kg	lb	kg	lb	kW	Hp	A
MVE60DC 12	3000	1.19	1.04	60	132.3	3.8	8.4	0.10	0.13	12.7
MVE60DC 24	3000	1.19	1.04	60	132.3	3.8	8.4	0.10	0.13	6.4
MVE60DC 36	3000	1.19	1.04	60	132.3	3.8	8.4	0.10	0.13	4.0
MVE100DC 12	3000	1.99	1.72	100	220.5	4.8	10.6	0.11	0.15	14.0
MVE100DC 24	3000	1.99	1.72	100	220.5	4.8	10.6	0.11	0.15	7.0
MVE100DC 36	3000	1.99	1.72	100	220.5	4.8	10.6	0.11	0.15	4.5

MVE-DC - DIRECT CURRENT ELECTRIC VIBRATORS FOR INDUSTRIAL SWEEPERS

APPLICATION	Industrial sweepers
PROBLEM SOLVED	Cleaning of dirt collection hopper

FEATURES

DUTY CYCLE	Continuous - S1
STANDARD CABLE	1m
ENVIRONMENT TEMPERATURE	From -20 °C to 40 °C (from -4 °F to 104 °F)

OPTIONS

CUSTOMISED CABLE	Available

This information is furnished without warranty, representation, inducement or license of any kind. It is accurate to the best OLI knowledge or is obtained from sources believed to be accurate. OLI therefore assumes no legal responsibility.

EXTERNAL APPLICATION

HYDRAULIC VIBRATORS

PRODUCT SERIES	APPLICATIONS	POWDERS	FEATURES	BENEFITS
HYDRAULIC VIBRATOR **MVO 850** 	Dump trucks Agricultural equipment Digging buckets Pipeline padder equipment Construction equipment	**Hygroscopic, wet, sticky and granular powder.** Clay Fertilizer Manure Sludge Aggregates	Continuous duty. Working pressure from 15 to 300 bar (from 217 to 4.350 PSI). Working temperature from -20 to 60 °C (from -4 to 140 °F). Max. noise level 80 dB(A). Speed from 3.000 to 6.000 rpm.	Robust Safe Easy to install Compact design High Force

APPLICATIONS

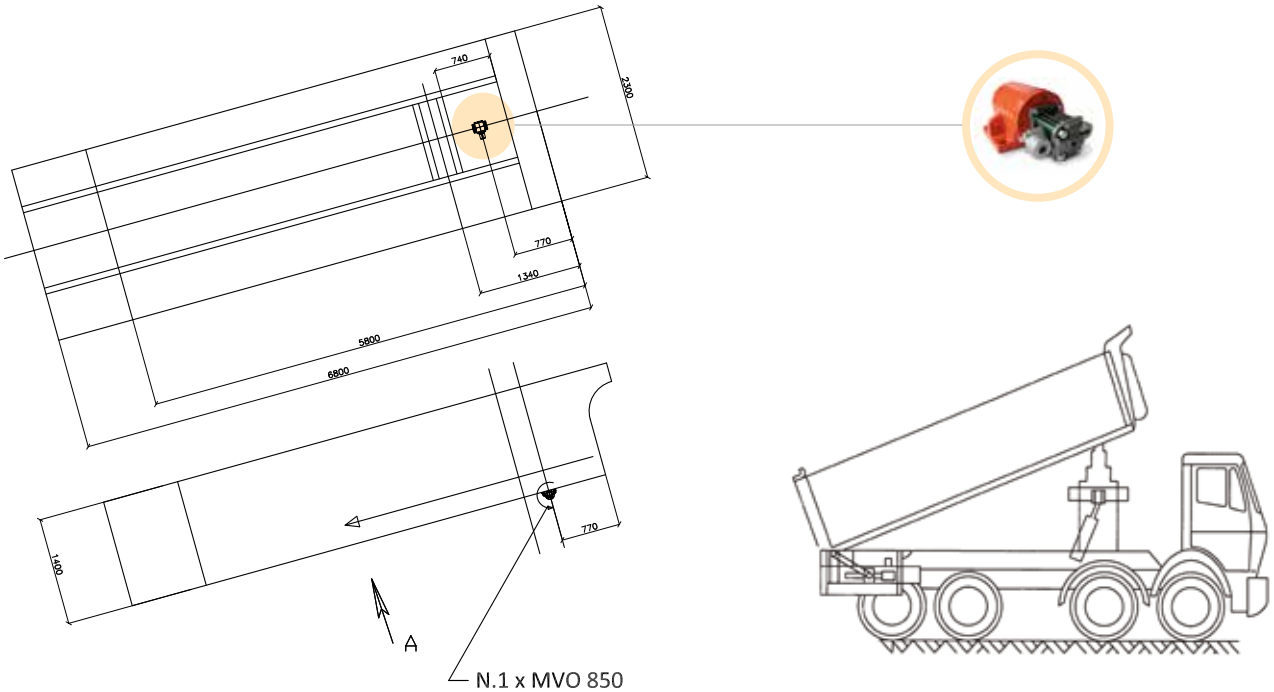

MVO - Hydraulic vibrators

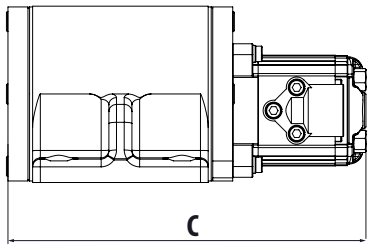

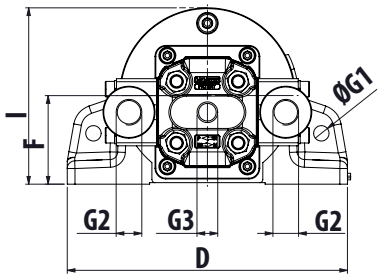

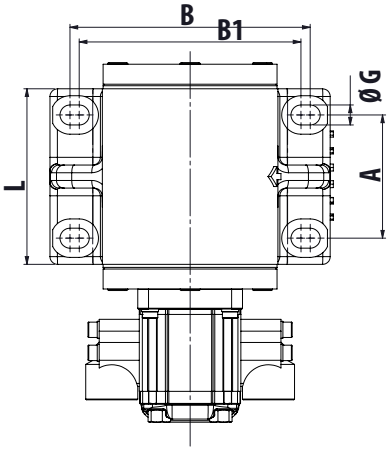

DIMENSIONAL SPECIFICATIONS																							
A		B		B1		C		D		L		F		G		G1		G2	G3	I		Weight	
mm	in	mm	in	mm	in	mm	in	mm	in	mm	in	mm	in	mm	in	mm	in	BSPP	BSPP	mm	in	kg	lb
80	3.2	156	6.1	144	5.7	233	9.2	182	7.2	115	4.5	58	2.3	13	0.5	10	0.4	3.8''	1/4''	114.5	4.50	11	24

MECHANICAL FEATURES										
MODEL	CENTRIFUGAL FORCE				WORKING MOMENT		STATIC MOMENT		OPERATING PRESS.	MAX PRESSURE
	3000 rpm		6000 rpm		kgcm	inlb	kgcm	inlb	bar	bar
	kg	lb	kg	lb					3000 rpm	6000 rpm
MVO 850	208	459	830	1830	4.12	3.57	2.06	1.78	70	120

BEARING LIFE			
rpm	CENTRIFUGAL FORCE		BEARING LIFE
	kg	lb	hrs
3000	208	459	1,375.922
6000	830	1830	6,826

MVO - HYDRAULIC VIBRATORS

APPLICATION	Dump trailer - agriculture machine - digging bucket
POWDER	Hygroscopic - wet sticky and granular
PROBLEM SOLVING	Detaching

FEATURES

DUTY CYCLE	Continuous - S1
WORKING PRESSURE	From 15 bar to 300 bar (from 217 psi to 4.350 psi)
HYDRAULIC CIRCUIT	Flow control valve + filter (mesh 30-60 micron)
ENGINE SIZE	3.12 Cm^3/round
WORKING TEMPERATURE	From -20 °C to 60 °C (from -4 °F to 140 °F)
OIL VISCOSITY	From 20 mm^2/sec to 100 mm^2/sec
OIL TYPE	HLP HV (D in 51524) hydraulic mineral oil
FLOW RATE	2,24 l/min (700 rpm) - 9,6 l/min (3.000 rpm) - 19,2 l/min (6.000 rpm)
MAX NOISE LEVEL	80 dB(a)
MOTOR TYPE	XV-1M/3.2
TECHNOLOGY	Hydraulic rotary vibrator
MATERIAL	Grey cast iron body (RAL 2004 powder painted)

This information is furnished without warranty, representation, inducement or license of any kind. It is accurate to the best OLI knowledge or is obtained from sources believed to be accurate. OLI therefore assumes no legal responsibility.

WHEN YOU NEED IT, WHERE YOU NEED IT.

THE WORLDWIDE LEADER IN VIBRATION TECHNOLOGY

WWW.OLIVIBRA.COM

OLI®

OLI Headquarters

Via Canalazzo, 35
41036 Medolla (MO) - Italy

+39 0535 41 06 11

info@olivibra.com

OLI worldwide

OLI Australia
OLI Benelux
OLI Brazil
OLI China
OLI France
OLI Germany
OLI India
OLI Italy
OLI Malta
OLI Middle East
OLI Nordic
OLI Russia
OLI South Africa
OLI Spain
OLI Thailand
OLI Turkey
OLI UK
OLI USA

WAMGROUP®

CFAEN 05/17 REV02